Simply a question of
better measurement

SCHMIDT® Technology

SCHMIDT® Flow Sensor SS 20.260

The reliable specialist – with fast reactions and cost-effective

- Industrial processes
- Ventilation / air-conditioning

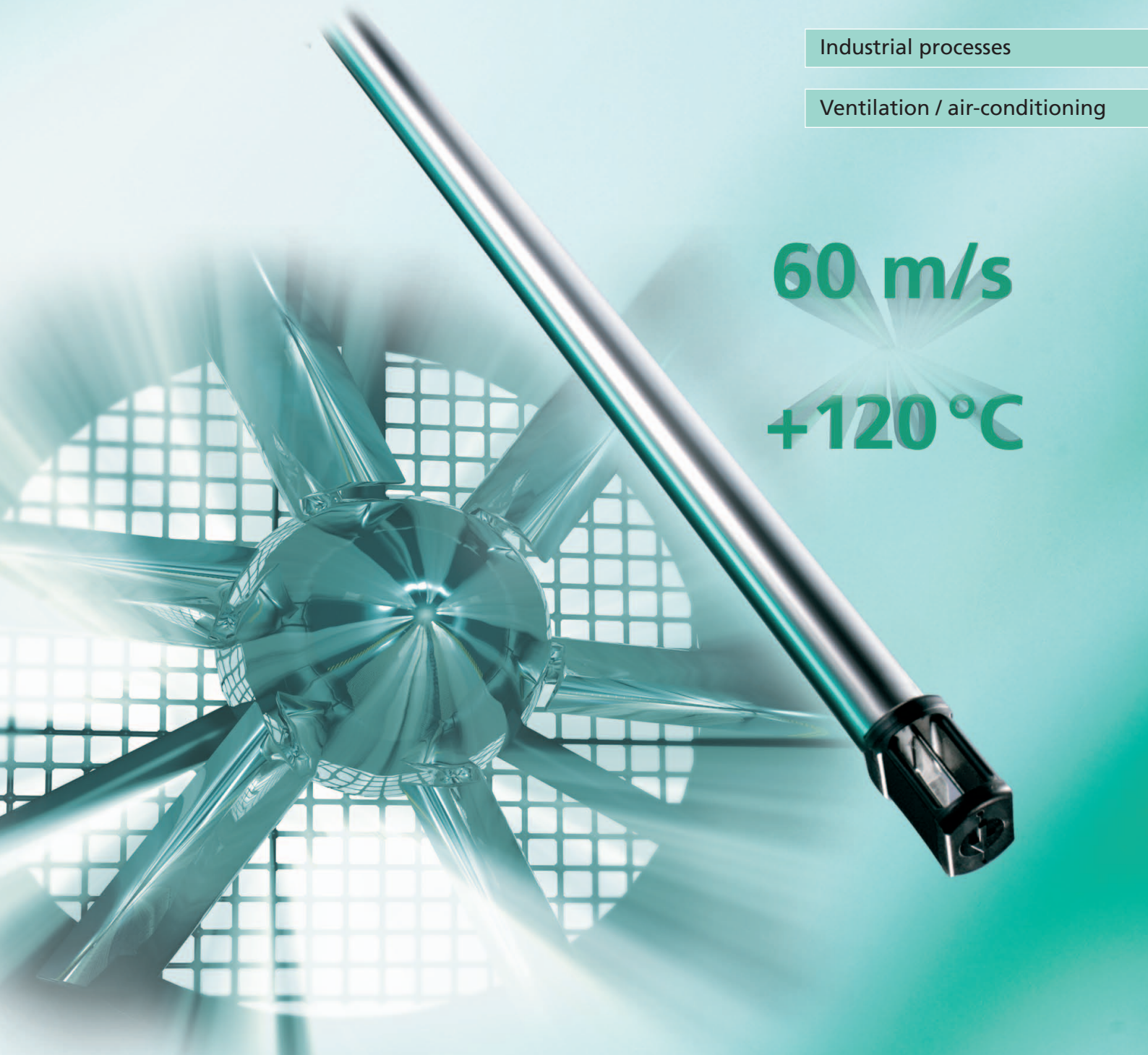



Direct flow measurement solves many tasks

The direct measurement of flow velocity in air and gases is the ideal solution for many applications. An accurate sensor is the first step of efficient and safe regulation and control. Thus there are high requirements from this sensor like a very wide measuring range of nearly zero up to the maximum value. Extensive and fault-prone detection of additional measurements, which have also to be calculated, are thus avoided. Typical applications of the SCHMIDT® flow sensor SS 20.260 in chamber head technology for ventilation and air conditioning as well as industrial processes are as follows:

- Inspection and energy efficient control of ventilation
- Permanent monitoring of filter units
- Safe control of volume flow in exhausts
- Monitoring and control of supply air in industrial burners
- Detection of air flows in quality relevant drying processes

The specialist with fast reactions

The thermal SCHMIDT® flow sensor SS 20.260 solves the user's requirements in an ideal way. The rugged design of the chamber head offers optimal protection against mechanical impacts of the sensor element in "free jet" applications. The installation into channels with a diameter from 25 mm up to 1 m is also very easy by means of a flange, compression fitting or by a central screw.

The chamber head technology

The sensor is positioned in the gas flow in a way that allows a parallel flow of the medium through the chamber head. Due to the special mechanical design the obstruction in the flow is very small and the parallel positioning towards the flow supports a self-cleaning effect of the sensor element. As protection for larger dirt particles there are deflection wires installed in front and behind of the sensor element. In addition the direct contact of the sensor element to the medium leads to a very fast measured value detection. Any necessary cleaning can be carried out very easily by immersion into water, alcohol or blowing out.

Two measuring units in one sensor

On request the SCHMIDT® flow sensor SS 20.260 can be delivered with an integrated temperature measurement of the medium over a wide range of -20 up to +120 °C without any additional installation effort. As linear output signals there are 0 … 10 V (only flow) or 4 … 20 mA (for flow and temperature) available.

Accuracy in black and white

On request the SCHMIDT® flow sensor SS 20.260 can be delivered with an factory calibration certificate which documents the high accuracy and reproducibility of flow measurement on the basis of real measuring values and deviations. SCHMIDT Technology carries out the measurement in reference channels. This calibration can be renewed by the user at any time.



Accessories



Compression fitting



Welding sleeve



Adjustable flange



LED display MD 10.010/015 in wall housing



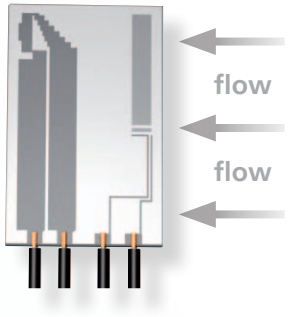



The sensor element

… is flow suitable and positioned in the aerodynamic chamber head where it is well-protected. Both sensors for flow and temperature are attached to the sensor element out of ceramic. For protection the sensors are covered with a thin glass layer.

Everything in view

Two LEDs clearly indicate the sensor is energized and that the operation is "OK".

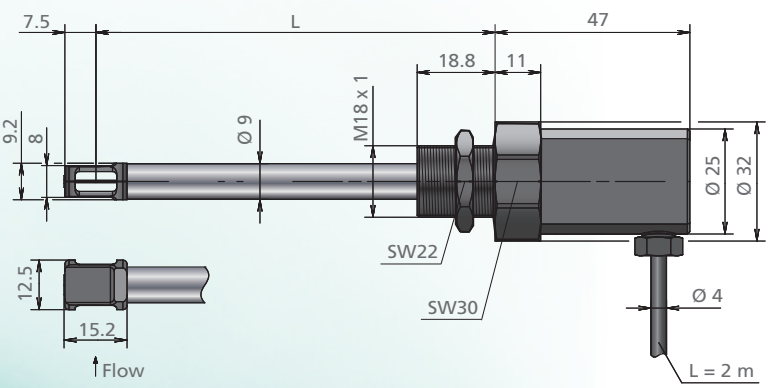

Technical data

Measurement specific data	
Measurement values	Standard velocity w_N, based on standard conditions of 20 °C and 1.013,25 hPa Temperature of medium T_M [2)]
Medium to be measured	Air or nitrogen, other gases upon request
Measuring range of flow w_N	0 ... 2,5 / 10 / 20 / 40 / 50[2)] / 60[2)] m/s
Lower detection limit w_N	0,2 m/s
Measuring range T_M	-20 ... +120 °C
Measuring accuracy	
Standard w_N [1)]	±(5 % of measured value + [0.4 % of fmr; min. 0.02 m/s])
High precision w_N (optional) [1)]	±(3 % of measured value + [0.4 % of fmr; min. 0.02 m/s])
Response time (t_{90}) w_N	3 s (jump from 0 to 5 m/s)
Temperature gradient w_N	< 8 K/min at 5 m/s
Measuring accuracy T_M (w_N > 2 m/s)	±1 K (0 … 40 °C) ±2 K (remaining measuring range)
Operating temperature	
Probe	-20 ... +120 °C
Electronics	-20 ... +70 °C
Storage temperature	-20 ... +85 °C
Material	
Sensor head	Platinum element, glass passivated, PPO/PAA
Sensor tube	Stainless steel 1.4571
Enclosure	PBT, glass-fiber-reinforced
Connecting cable	PVC
General data	
Humidity	Measuring mode: non-condensing (< 95 % RH)
Operating pressure	Atmospheric (700 … 1.300 hPa)
Display	LED green: operating status LED red: sensor defective
Supply voltage	24 V DC ± 10 %
Current consumption	< 60 mA
Output signals (linear) for temperature and flow	0 ... 10 V ($R_L \geq 10$ kΩ) 4 ... 20 mA ($R_L \leq 300$ Ω)
Connection	Fixed cable, 4-pin, length 2 m Options: 3 ... 100 m (step: 1 m) / 0.2 m with M12 plug (male), 4-pin
Maximum cable length [3)]	100 m
Installation position	Arbitrary
Installation tolerance	±3° to flow direction
Ingress protection/protection class	IP65 / III (SELV or PELV)
Probe length L	50 / 100 / 200 / 350 / 500 mm
Weight	200 g max.

[1)] under reference conditions, related to the calibration reference
fmr = final measuring range
[2)] only sensor version "2"
[3)] voltage mode: using of AGND and $R_L \geq 10$ kΩ (mass offset)

Order information SCHMIDT® Flow Sensor SS 20.260

	Description	Article number					
Basic sensor	SCHMIDT® Flow Sensor SS 20.260; basic version: w_N; cable 2 m Output signal: 0 … 10 V / 4 … 20 mA	506 690-1	X	Y	Z	K	A
	Options						
Mechanical type	Probe length 50 mm		1				
	Probe length 100 mm		2				
	Probe length 200 mm		3				
	Probe length 350 mm		4				
	Probe length 500 mm		5				
Measuring ranges and calibration	Measuring range 0…2.5 m/s			1			
	Measuring range 0…10 m/s			2			
	Measuring range 0…20 m/s			3			
	Measuring range 0…40 m/s			4			
	Standard adjustment				1		
	Standard adjustment with factory calibration certificate				3		
	High precision adjustment with factory calibration certificate				2		
Output signals	0 … 10 V					1	
	4 … 20 mA					2	
Connecting cable	Cable length 2 m						1
	Cable length 0.2 m with M12 connector, screwed, 4-pole						2
	Special length (3 ... 100 m; in steps of 1 m): ____ m						9
	Description	**Article number**					
Basic sensor with temperature output	SCHMIDT® Flow Sensor SS 20.260; basic version: w_N and T_M; cable 2 m Output signals: 2 x 4 … 20 mA	506 690-2	X	Y	Z	4	A
	Options						
Mechanical type	Probe length 50 mm		1				
	Probe length 100 mm		2				
	Probe length 200 mm		3				
	Probe length 350 mm		4				
	Probe length 500 mm		5				
Measuring ranges and calibration	Measuring range 0…10 m/s			2			
	Measuring range 0…20 m/s			3			
	Measuring range 0…40 m/s			4			
	Measuring range 0…50 m/s			5			
	Measuring range 0…60 m/s			6			
	Standard adjustment				1		
	Standard adjustment with factory calibration certificate				3		
	High precision adjustment with factory calibration certificate				2		
Connecting cable	Cable length 2 m						1
	Cable length 0.2 m with M12 connector, screwed, 4-pole						2
	Special length (3 ... 100 m; in steps of 1 m): ____ m						9
	Description	**Article number**					
Accessories	Mounting flange steel made of galvanized steel	301 048					
	Compression fitting brass G½, atmospheric pressure	517 206					
	Compression fitting, stainless steel, G½, atmospheric pressure	539 746					
	Welding sleeve, stainless steel, G½, according to EN 10241, 2 pieces	524 882					
	Welding sleeve steel G½, according to EN 10241, 5 pieces	524 916					
	Power supply: output 24 V DC / 1 A; input 115 / 230 V AC	535 282					
	LED display MD 10.010 in wall housing to show the volume flow and the flow velocity, 85 … 230 V AC and sensor power supply	527 320					
	LED display MD 10.010, similar to 527 320 but with 24 V DC voltage supply	528 240					
	LED display MD 10.015, similar to 527 320 but with an additional sum function and a second measuring input	527 330					
	LED display MD 10.015, similar to 527 330 but with 24 V DC voltage supply	528 250					
	Assembly kit for pipe assembly suitable for MD 10.010 / MD 10.015, including pipe clamps and collar for adjustment to the pipe diameter	531 394					

Form 1092/02/11/3000/2 · Art. No. 508978.02D · Data subject to change

SCHMIDT Technology GmbH
Feldbergstr. 1 · 78112 St. Georgen/Schwarzwald · Germany · Phone +49 (0) 77 24/89 90
sensors@schmidttechnology.de · www.schmidttechnology.de · www. schmidt-sensors.com