Torque sensor TS70 5Nm

Item number: 2104



Highlights

- Drive held exclusively by the sensor
- Measurement of the reaction torque

The torque sensor consists of an outer flange and an inner flange which are connected by 4 shear beams. Outer and inner flange have 4 threads M4 each for torque introduction. The sensor is suitable for measurement of reaction moment in drives and teststands.

ME-Meßsysteme GmbH
Eduard-Maurer-Str. 9
DE-16761 Hennigsdorf

Tel: +49 (0)3302 8982 4 10
Mail: vertrieb@me-systeme.de
Web: www.me-systeme.de

Stand: 25.03.2026

Technical Drawing

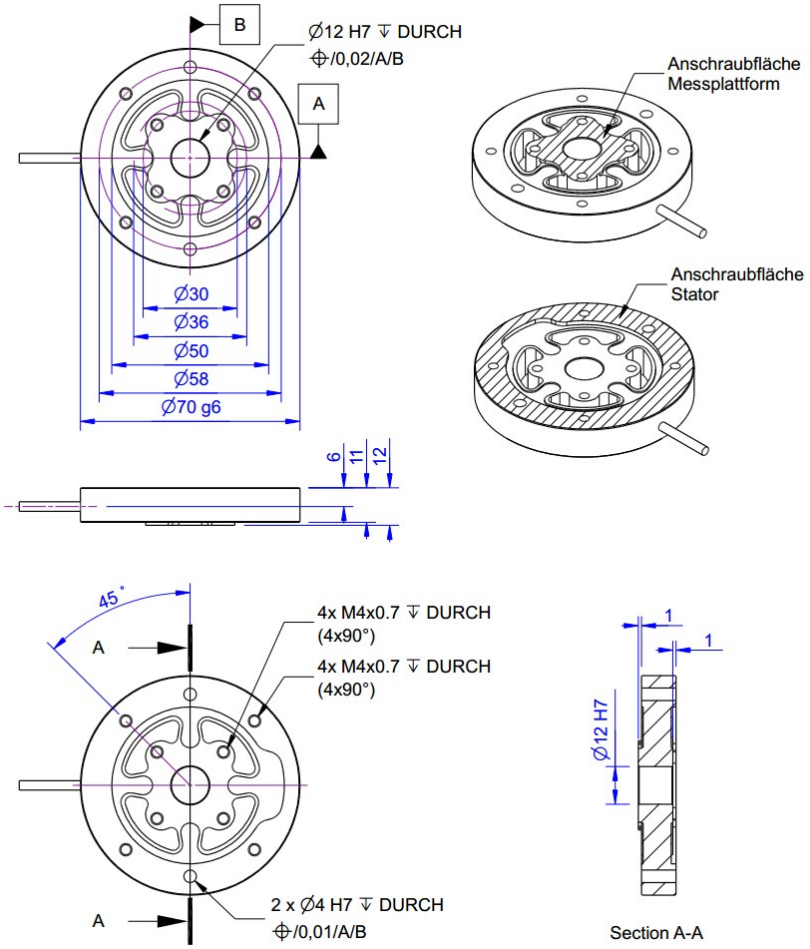

ME-Meßsysteme GmbH
Eduard-Maurer-Str. 9
DE-16761 Hennigsdorf

Tel: +49 (0)3302 8982 4 10
Mail: vertrieb@me-systeme.de
Web: www.me-systeme.de

Stand: 25.03.2026

Technical Data

Basic Data		Unit
Type	Scherbalken	
Rated torque	5	Nm
Bending moment limit	5	Nm
Maximum operating torque	150	%FS
Breaking torque	400	%FS
Rated torsion angle	0.02	°/FS
Axial force limit	200	N
Lateral force limit	200	N
Torque introduction	pitch circle	
Dimension (torque introduction)	Ø30	
sensor fastening	pitch circle	
Dimension 2	Ø58	
Diameter	70	mm
length	10	mm
Material	alluminum-alloy	
Dimensions	Ø 70mm x 10mm	
Variants	2Nm... 10Nm	

ME-Meßsysteme GmbH
Eduard-Maurer-Str. 9
DE-16761 Hennigsdorf

Tel: +49 (0)3302 8982 4 10
Mail: vertrieb@me-systeme.de
Web: www.me-systeme.de

Stand: 25.03.2026

Electrical Data		Unit
Input resistance	2000	Ohm
Tolerance input resistance	20	Ohm
Output resistance	2000	Ohm
Tolerance output resistance	20	Ohm
Insulation resistance	5	GOhm
Rated range of excitation voltage from	2.5	V
Rated range of excitation voltage to	5	V
Operating range of excitation voltage from	1	V
Operating range of excitation voltage to	10	V
Zero signal	0.05	mV/V
Rated output	0.5	mV/V / FS
Characteristic value range from	0.5	mV/V / FS
Characteristic value range to	0.7	mV/V / FS

Accuracy Data		Unit
Accuracy class	0,1	
Relative linearity error	0.1	%FS
Relative zero signal hysteresis	0.1	%FS
Temperature effect on zero signal	0.01	%FS/K
Temperature effect on characteristic value	0.01	%RD/K
Relative creep	0.05	%FS

Environmental Data	Unit

Abbreviation : RD: „Reading“; FS: „Full Scale“;1) The exact nominal sensitivity is indicated in the test report.

ME-Meßsysteme GmbH
Eduard-Maurer-Str. 9
DE-16761 Hennigsdorf

Tel: +49 (0)3302 8982 4 10
Mail: vertrieb@me-systeme.de
Web: www.me-systeme.de

Stand: 25.03.2026

Pin Assignment

Channel	Symbol	Description	Wire color	PIN
	+Us	positive bridge supply	red	
	-Us	negative bridge supply	black	
	+Ud	positive bridge output	green	
	-Ud	negative bridge output	white	

Pressure load: positive output signal.Shield- transparent.

ME-Meßsysteme GmbH
Eduard-Maurer-Str. 9
DE-16761 Hennigsdorf

Tel: +49 (0)3302 8982 4 10
Mail: vertrieb@me-systeme.de
Web: www.me-systeme.de

Stand: 25.03.2026