Torque sensor TS170 100Nm

Item number: 3213

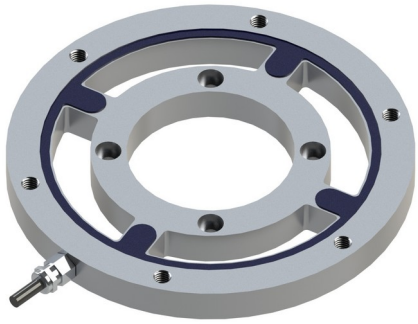

The torque sensor comprises an external flange and an inner flange, which are interconnected via 4 torque axle brackets. The outer and inner flange have 6 or 4 M8 screw threads respectively to apply torque.

The sensor is designed to measure the reaction torque. For this purpose, the engine is constrained exclusively by the sensor. The structure with internal holes is selected to ensure that engine or test bench shafts have sufficient space.

The torque sensor TS170 is used in torque testers for quality assurance as well as in manufacturing machines.

ME-Meßsysteme GmbH
Eduard-Maurer-Str. 9
DE-16761 Hennigsdorf

Tel: +49 (0)3302 8982 4 10
Mail: vertrieb@me-systeme.de
Web: www.me-systeme.de

Stand: 20.03.2026

Technical Drawing

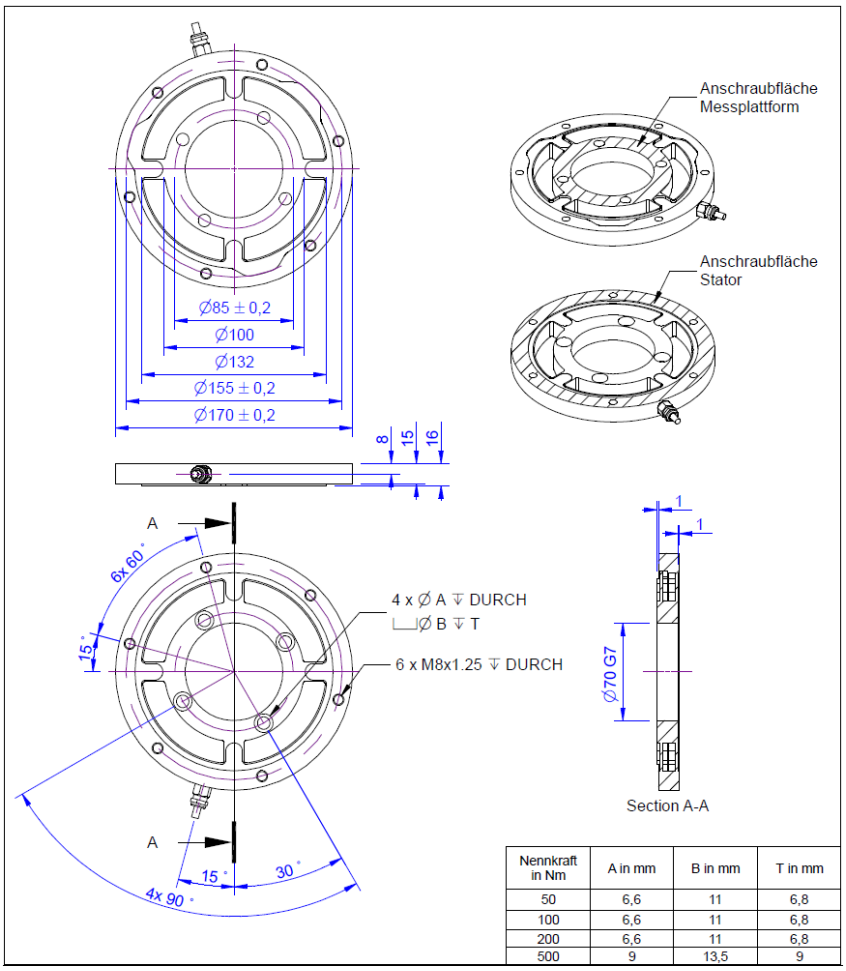

Nennkraft in Nm	A in mm	B in mm	T in mm
50	6,6	11	6,8
100	6,6	11	6,8
200	6,6	11	6,8
500	9	13,5	9

ME-Meßsysteme GmbH
Eduard-Maurer-Str. 9
DE-16761 Hennigsdorf

Tel: +49 (0)3302 8982 4 10
Mail: vertrieb@me-systeme.de
Web: www.me-systeme.de

Stand: 20.03.2026

Technical Data

Basic Data		Unit
Type	Scherbalken	
Rated torque	100	Nm
Bending moment limit	50	Nm
Maximum operating torque	150	%FS
Breaking torque	400	%FS
Rated torsion angle	0.015	°/FS
Axial force limit	1000	N
Lateral force limit	1000	N
Torque introduction	pitch circle	
Dimension (torque introduction)	Ø85	
sensor fastening	pitch circle	
Dimension 2	Ø155	
Diameter	170	mm
length	16	mm
Material	alluminum-alloy	
Dimensions	Ø 170mm x 16mm	
Variants	50Nm... 500Nm	

ME-Meßsysteme GmbH
Eduard-Maurer-Str. 9
DE-16761 Hennigsdorf

Tel: +49 (0)3302 8982 4 10
Mail: vertrieb@me-systeme.de
Web: www.me-systeme.de

Stand: 20.03.2026

Electrical Data		Unit
Input resistance	700	Ohm
Tolerance input resistance	10	±
Output resistance	700	Ohm
Tolerance output resistance	10	±
Insulation resistance	5x10^9	Ohm
Rated range of excitation voltage from	2.5	V
Rated range of excitation voltage to	5	V
Operating range of excitation voltage from	1	V
Operating range of excitation voltage to	10	V
Zero signal	0.05	mV/V
Rated output	1	mV/V / FS

Accuracy Data		Unit
Accuracy class	0,1	
Relative linearity error	0.1	%FS
Relative zero signal hysteresis	0.1	%FS
Temperature effect on zero signal	0.1	%FS/K
Temperature effect on characteristic value	0.1	%RD/K
Relative creep	0.05	%FS

Environmental Data	Unit

Abbreviation: RD: „Reading“; FS: „Full Scale“;1) The exact nominal sensitivity is indicated in the test report;

ME-Meßsysteme GmbH
Eduard-Maurer-Str. 9
DE-16761 Hennigsdorf

Tel: +49 (0)3302 8982 4 10
Mail: vertrieb@me-systeme.de
Web: www.me-systeme.de

Stand: 20.03.2026

Pin Assignment

Channel	Symbol	Description	Wire color	PIN
	+Us	positive bridge supply	brown	
	-Us	negative bridge supply	white	
	+Ud	positive bridge output	green	
	-Ud	negative bridge output	yellow	

Screen - transparent. Compressive load : positive output signal

ME-Meßsysteme GmbH
Eduard-Maurer-Str. 9
DE-16761 Hennigsdorf

Tel: +49 (0)3302 8982 4 10
Mail: vertrieb@me-systeme.de
Web: www.me-systeme.de

Stand: 20.03.2026