# Torque sensor TS170 200Nm

Item number: 3971

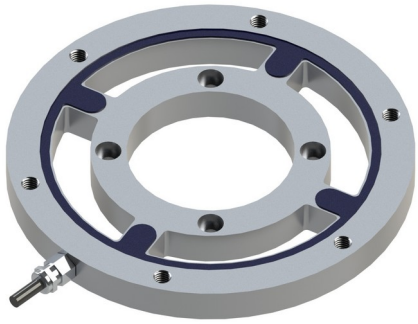

The torque sensor comprises an external flange and an inner flange, which are interconnected via 4 torque axle brackets. The outer and inner flange have 6 or 4 M8 screw threads respectively to apply torque.

The sensor is designed to measure the reaction torque. For this purpose, the engine is constrained exclusively by the sensor. The structure with internal holes is selected to ensure that engine or test bench shafts have sufficient space.

The torque sensor TS170 is used in torque testers for quality assurance as well as in manufacturing machines.

ME-Meßsysteme GmbH
Eduard-Maurer-Str. 9
DE-16761 Hennigsdorf

Tel: +49 (0)3302 8982 4 10
Mail: vertrieb@me-systeme.de
Web: www.me-systeme.de

Stand: 20.03.2026

## Technical Drawing

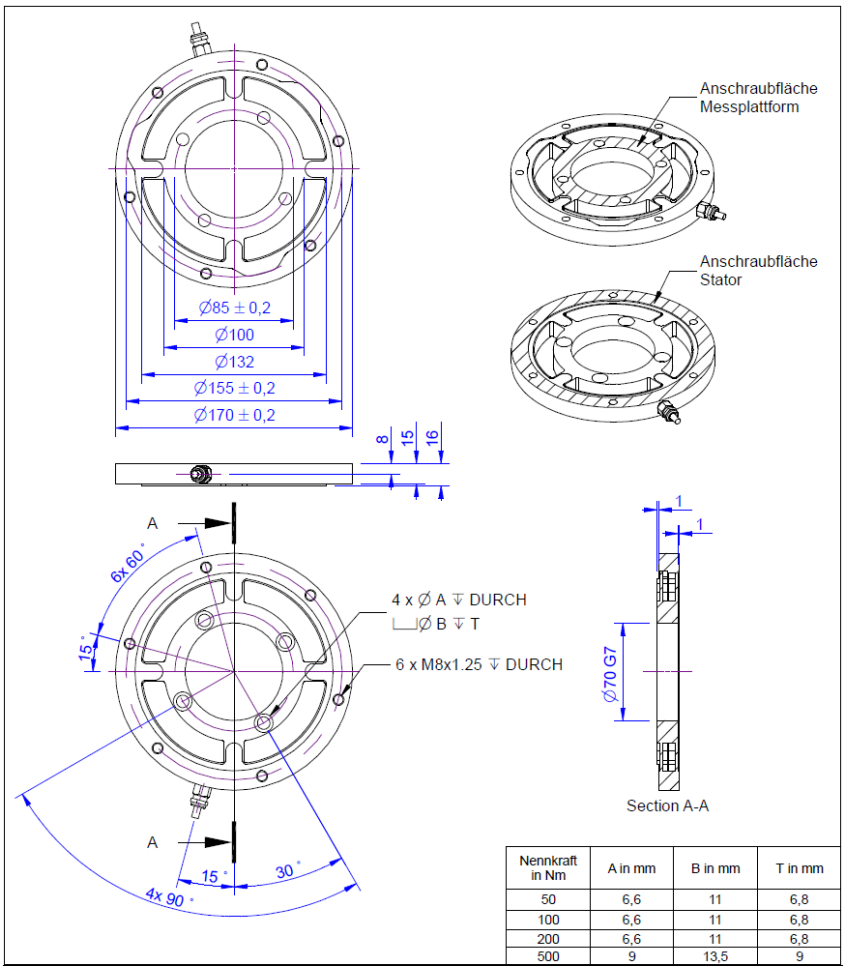


| Nennkraft in Nm | A in mm | B in mm | T in mm |
|---|---|---|---|
| 50 | 6,6 | 11 | 6,8 |
| 100 | 6,6 | 11 | 6,8 |
| 200 | 6,6 | 11 | 6,8 |
| 500 | 9 | 13,5 | 9 |

ME-Meßsysteme GmbH
Eduard-Maurer-Str. 9
DE-16761 Hennigsdorf

Tel: +49 (0)3302 8982 4 10
Mail: vertrieb@me-systeme.de
Web: www.me-systeme.de

Stand: 20.03.2026

## Technical Data

| Basic Data | | Unit |
|---|---|---|
| Type | Scherbalken | |
| Rated torque | 200 | Nm |
| Bending moment limit | 50 | Nm |
| Maximum operating torque | 150 | %FS |
| Breaking torque | 400 | %FS |
| Rated torsion angle | 0.015 | °/FS |
| Axial force limit | 1000 | N |
| Lateral force limit | 1000 | N |
| Torque introduction | pitch circle | |
| Dimension (torque introduction) | Ø85 | |
| sensor fastening | pitch circle | |
| Dimension 2 | Ø155 | |
| Diameter | 170 | mm |
| length | 16 | mm |
| Material | alluminum-alloy | |
| Dimensions | Ø 170mm x 16mm | |
| Variants | 50Nm... 500Nm | |

ME-Meßsysteme GmbH
Eduard-Maurer-Str. 9
DE-16761 Hennigsdorf

Tel: +49 (0)3302 8982 4 10
Mail: vertrieb@me-systeme.de
Web: www.me-systeme.de

Stand: 20.03.2026

| Electrical Data | | Unit |
|---|---|---|
| Input resistance | 700 | Ohm |
| Tolerance input resistance | 10 | ± |
| Output resistance | 700 | Ohm |
| Tolerance output resistance | 10 | ± |
| Insulation resistance | 5x10^9 | Ohm |
| Rated range of excitation voltage from | 2.5 | V |
| Rated range of excitation voltage to | 5 | V |
| Operating range of excitation voltage from | 1 | V |
| Operating range of excitation voltage to | 10 | V |
| Zero signal | 0.05 | mV/V |
| Rated output | 1 | mV/V / FS |

| Accuracy Data | | Unit |
|---|---|---|
| Accuracy class | 0,1 | |
| Relative linearity error | 0.1 | %FS |
| Relative zero signal hysteresis | 0.1 | %FS |
| Temperature effect on zero signal | 0.1 | %FS/K |
| Temperature effect on characteristic value | 0.1 | %RD/K |
| Relative creep | 0.05 | %FS |

| Environmental Data | Unit |
|---|---|

Abbreviation: RD: „Reading“; FS: „Full Scale“;1) The exact nominal sensitivity is indicated in the test report;

ME-Meßsysteme GmbH
Eduard-Maurer-Str. 9
DE-16761 Hennigsdorf

Tel: +49 (0)3302 8982 4 10
Mail: vertrieb@me-systeme.de
Web: www.me-systeme.de

Stand: 20.03.2026

## Pin Assignment

| Channel | Symbol | Description | Wire color | PIN |
|---|---|---|---|---|
| | +Us | positive bridge supply | brown | |
| | -Us | negative bridge supply | white | |
| | +Ud | positive bridge output | green | |
| | -Ud | negative bridge output | yellow | |

Screen - transparent. Compressive load : positive output signal

ME-Meßsysteme GmbH
Eduard-Maurer-Str. 9
DE-16761 Hennigsdorf

Tel: +49 (0)3302 8982 4 10
Mail: vertrieb@me-systeme.de
Web: www.me-systeme.de

Stand: 20.03.2026