Torque sensor TS110

Item number: 4129



The torque sensor TS110 is suitable for measuring the reaction torque (cable-connected, non-rotating).
The torque sensor consists of an outer flange and an inner flange which are connected to each other via 4 measuring spokes.

The outer flange has 4 tapped holes M6, the inner flange is equipped with 4 countersinks for M6 screws DIN912.

The torque sensor TS110 is used both in torque test stands for quality assurance as well as in production machines.

The sensor is available in aluminum (20 Nm ... 100 Nm) and in spring steel (50 ... 200 Nm).
Since the torque is transmitted only by means of a force connection, the inner flange must be mounted with a sufficient friction coefficient from a torque of 100 Nm.
The use of a (detachable) joint, e.g. Loxeal-8521 or Loctite 630 is recommended.
From a nominal moment of 100 Nm, the inner flange is provided with a blasted surface.

The TS110 sensor was replaced in 2014 by the improved design TS110a.

ME-Meßsysteme GmbH
Eduard-Maurer-Str. 9
DE-16761 Hennigsdorf

Tel: +49 (0)3302 8982 4 10
Mail: vertrieb@me-systeme.de
Web: www.me-systeme.de

Stand: 24.04.2024

Technical Drawing

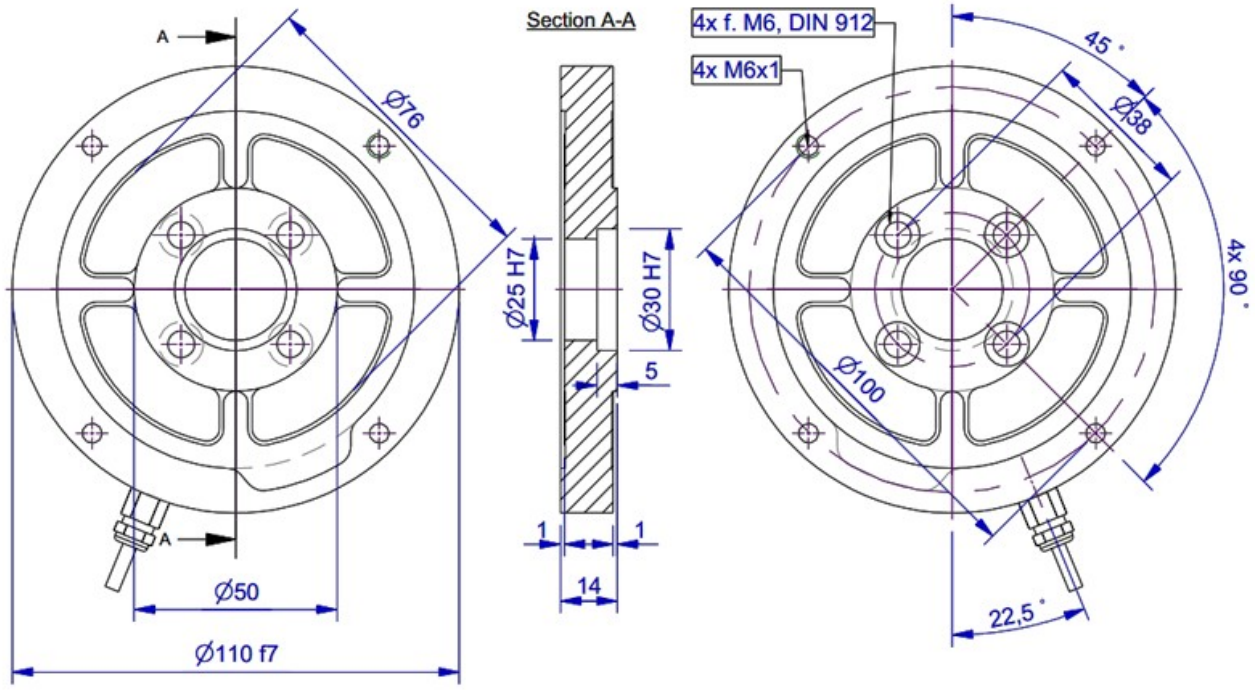

Technical Data

Basic Data		Unit
Type	Scherbalken	
Rated torque	50	Nm
Maximum operating torque	150	%FS
Breaking torque	400	%FS
Rated torsion angle	0.7	°/FS
Axial force limit	2000	N
Torque introduction	pitch circle	
Dimension (torque introduction)	Ø38	
sensor fastening	pitch circle	
Dimension 2	Ø100	
Diameter	110	mm
length	14	mm
Material	alluminum-alloy	

Electrical Data		Unit
Input resistance	2000	Ohm
Tolerance input resistance	10	±
Output resistance	2000	Ohm
Tolerance output resistance	10	±
Insulation resistance	5x10^9	Ohm
Rated range of excitation voltage from	2.5	V
Rated range of excitation voltage to	5	V
Operating range of excitation voltage from	1	V
Operating range of excitation voltage to	10	V
Zero signal	0.05	mV/V
Rated output	1	mV/V / FS

ME-Meßsysteme GmbH
Eduard-Maurer-Str. 9
DE-16761 Hennigsdorf

Tel: +49 (0)3302 8982 4 10
Mail: vertrieb@me-systeme.de
Web: www.me-systeme.de

Stand: 24.04.2024

Accuracy Data		Unit
Accuracy class	0,1	
Relative linearity error	0.1	%FS
Relative zero signal hysteresis	0.1	%FS
Temperature effect on zero signal	0.01	%FS/K
Temperature effect on characteristic value	0.01	%RD/K
Relative creep	0.05	%FS

Environmental Data		Unit
Rated temperature range from	-10	°C
Rated temperature range to	60	°C
Operating temperature range from	-10	°C
Operating temperature range to	85	°C
Storage temperature range from	-10	°C
Storage temperature range to	85	°C
Environmental protection	IP65	

Abbreviation: RD: „Reading“; FS: „Full Scale“;1) The exact nominal sensitivity is indicated in the test report;

Pin Assignment

Channel	Symbol	Description	Wire color	PIN
	+Us	positive bridge supply	brown	
	-Us	negative bridge supply	white	
	+Ud	positive bridge output	green	
	-Ud	negative bridge output	yellow	

Pressure load: positive output signal.
Shield- transparent.

ME-Meßsysteme GmbH
Eduard-Maurer-Str. 9
DE-16761 Hennigsdorf

Tel: +49 (0)3302 8982 4 10
Mail: vertrieb@me-systeme.de
Web: www.me-systeme.de

Stand: 24.04.2024