Torque sensor TD70 25mNm

Item number: 3133

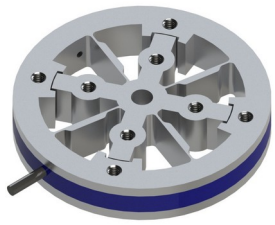

Highlights

- By using distance pieces the torque sensor is also isolated thermically from the traction unit
- Through the integrated mechanical stopper overload is prevented.

The torque sensor consists of an outer flange and an inner flange which are connected by 4 s-shaped spiral springs. Outer and inner flange have 4 threads M4 each for torque introduction.
The sensor is suitable for measurement of reaction moment e.g. in the clock industry, in wind tunnel weighersor for measurement of frictional forces.
Through the integrated mechanical stopper overload is prevented.
It is recommended to insert distance pieces as shown in the assembly drawing. These can be shock absorbers with M4 threads.
By using distance pieces the torque sensor is also isolated thermically from the traction unit.

ME-Meßsysteme GmbH
Eduard-Maurer-Str. 9
DE-16761 Hennigsdorf

Tel: +49 (0)3302 8982 4 10
Mail: vertrieb@me-systeme.de
Web: www.me-systeme.de

Stand: 21.04.2026

Technical Drawing

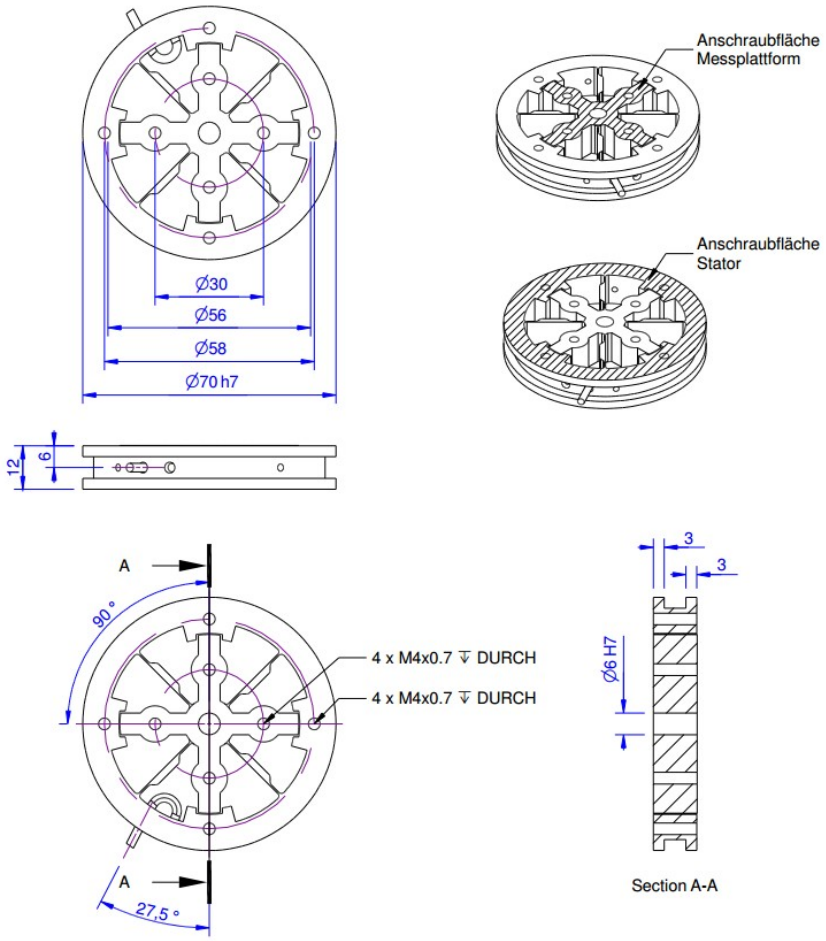

ME-Meßsysteme GmbH
Eduard-Maurer-Str. 9
DE-16761 Hennigsdorf

Tel: +49 (0)3302 8982 4 10
Mail: vertrieb@me-systeme.de
Web: www.me-systeme.de

Stand: 21.04.2026

Technical Data

Basic Data		Unit
Type	Biegefeder	
Rated torque	25	mNm
Bending moment limit	5	Nm
Maximum operating torque	150	%FS
Breaking torque	400	%FS
Rated torsion angle	0.7	°/FS
Axial force limit	100	N
Lateral force limit	100	N
Torque introduction	pitch circle	
Dimension (torque introduction)	Ø30	
sensor fastening	pitch circle	
Dimension 2	Ø58	
Diameter	70	mm
length	10	mm
Dimensions	Ø 70mm x 10mm	

ME-Meßsysteme GmbH
Eduard-Maurer-Str. 9
DE-16761 Hennigsdorf

Tel: +49 (0)3302 8982 4 10
Mail: vertrieb@me-systeme.de
Web: www.me-systeme.de

Stand: 21.04.2026

Electrical Data		Unit
Input resistance	350	Ohm
Tolerance input resistance	10	Ohm
Output resistance	350	Ohm
Tolerance output resistance	10	Ohm
Insulation resistance	5	GOhm
Rated range of excitation voltage from	2.5	V
Rated range of excitation voltage to	5	V
Operating range of excitation voltage from	1	V
Operating range of excitation voltage to	10	V
Zero signal	0.05	mV/V
Rated output	0.4	mV/V / FS
Characteristic value range from	0.2	mV/V / FS
Characteristic value range to	0.6	mV/V / FS

Accuracy Data		Unit
Accuracy class	0,1	
Relative linearity error	0.1	%FS
Relative zero signal hysteresis	0.1	%FS
Temperature effect on zero signal	0.05	%FS/K
Temperature effect on characteristic value	0.02	%RD/K
Relative creep	0.05	%FS

Environmental Data	Unit

Abbreviation : RD: „Reading“; FS: „Full Scale“;
The characteristic value is indicated in the test report;

ME-Meßsysteme GmbH
Eduard-Maurer-Str. 9
DE-16761 Hennigsdorf

Tel: +49 (0)3302 8982 4 10
Mail: vertrieb@me-systeme.de
Web: www.me-systeme.de

Stand: 21.04.2026

Pin Assignment

Channel	Symbol	Description	Wire color	PIN
	+Us	positive bridge supply	red	
	-Us	negative bridge supply	black	
	+Ud	positive bridge output	green	
	-Ud	negative bridge output	white	

Pressure load: positive output signal.Shield- transparent.

ME-Meßsysteme GmbH
Eduard-Maurer-Str. 9
DE-16761 Hennigsdorf

Tel: +49 (0)3302 8982 4 10
Mail: vertrieb@me-systeme.de
Web: www.me-systeme.de

Stand: 21.04.2026