Torque sensor TD50 500mNm

Item number: 5195

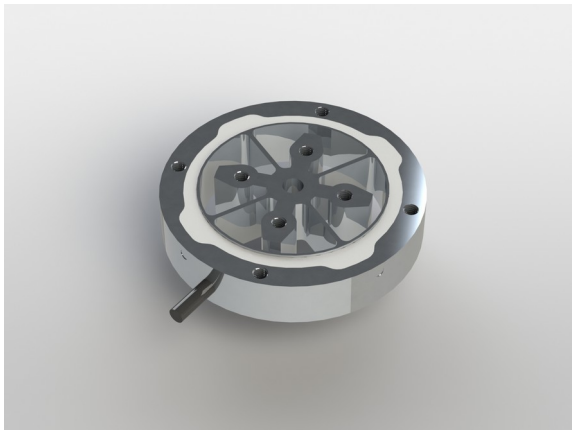

Highlights

- Customer-specific nominal torques possible
- Outer flange and inner flange, connected via 4 s-shape bending springs

Customer-specific nominal torques are technically possible: ±0.05 Nm to ±0.50 Nm

The torque sensor consists of an outer flange and an inner flange, which are connected to each other via 4 s-shape bending springs. The outer and inner flanges each have 4 M3 threads for introducing the torque.

The sensor is suitable for measuring the reaction torque e.g. in the watch industry, in micromechanics e.g. motor testing and for measuring frictional forces.

The integrated stop makes the sensor robust against overload.

Translated with DeepL.com (free version)

ME-Meßsysteme GmbH
Eduard-Maurer-Str. 9
DE-16761 Hennigsdorf

Tel: +49 (0)3302 8982 4 10
Mail: vertrieb@me-systeme.de
Web: www.me-systeme.de

Stand: 26.03.2026

Technical Drawing

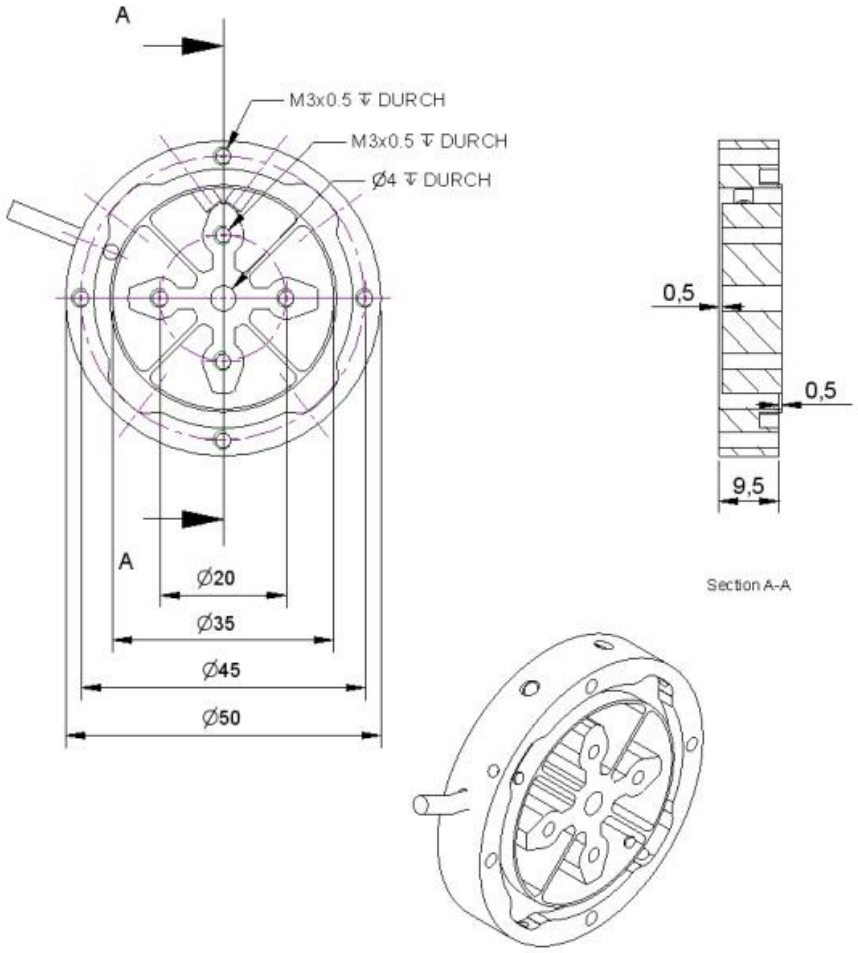

ME-Meßsysteme GmbH
Eduard-Maurer-Str. 9
DE-16761 Hennigsdorf

Tel: +49 (0)3302 8982 4 10
Mail: vertrieb@me-systeme.de
Web: www.me-systeme.de

Stand: 26.03.2026

Technical Data

Basic Data		Unit
Type	Biegefeder	
Rated torque	500	mNm
Bending moment limit	3	Nm
Maximum operating torque	150	%FS
Breaking torque	400	%FS
Rated torsion angle	0.7	°/FS
Axial force limit	50	N
Lateral force limit	50	N
Torque introduction	pitch circle	
Dimension (torque introduction)	Ø20	
sensor fastening	pitch circle	
Dimension 2	Ø45	
Diameter	50	mm
length	10	mm
Material	alluminum-alloy	
Dimensions	Ø 50mm x 10mm	
Variants	150mNm... 500mNm	

ME-Meßsysteme GmbH
Eduard-Maurer-Str. 9
DE-16761 Hennigsdorf

Tel: +49 (0)3302 8982 4 10
Mail: vertrieb@me-systeme.de
Web: www.me-systeme.de

Stand: 26.03.2026

Electrical Data		Unit
Input resistance	350	Ohm
Tolerance input resistance	20	Ohm
Output resistance	350	Ohm
Insulation resistance	2	GOhm
Rated range of excitation voltage from	2.5	V
Rated range of excitation voltage to	5	V
Operating range of excitation voltage from	1	V
Operating range of excitation voltage to	5	V
Zero signal	0.1	mV/V
Characteristic value range from	0.5	mV/V / FS
Characteristic value range to	1.1	mV/V / FS

Accuracy Data		Unit
Accuracy class	0,2	
Relative linearity error	0.1	%FS
Relative zero signal hysteresis	0.1	%FS
Temperature effect on zero signal	0.1	%FS/K
Temperature effect on characteristic value	0.1	%RD/K
Relative creep	0.05	%FS

Environmental Data	Unit

ME-Meßsysteme GmbH
Eduard-Maurer-Str. 9
DE-16761 Hennigsdorf

Tel: +49 (0)3302 8982 4 10
Mail: vertrieb@me-systeme.de
Web: www.me-systeme.de

Stand: 26.03.2026

Pin Assignment

Channel	Symbol	Description	Wire color	PIN
	+Us	positive bridge supply	red	
	-Us	negative bridge supply	black	
	+Ud	positive bridge output	green	
	-Ud	negative bridge output	white	

Pressure load: positive output signal.Shield- transparent.

ME-Meßsysteme GmbH
Eduard-Maurer-Str. 9
DE-16761 Hennigsdorf

Tel: +49 (0)3302 8982 4 10
Mail: vertrieb@me-systeme.de
Web: www.me-systeme.de

Stand: 26.03.2026