Torque sensor TD175 10Nm

Item number: 4283

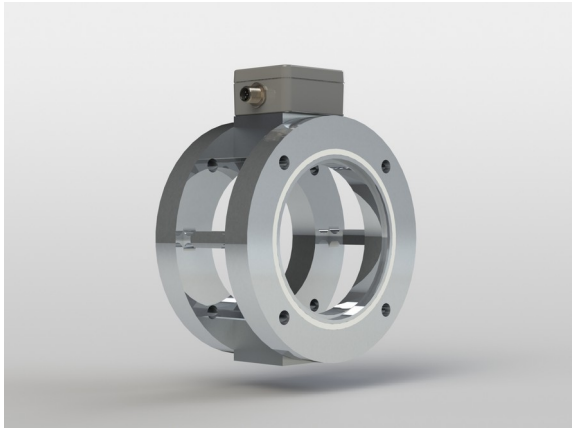

Highlights

- Optionally, a GSV-1A measuring amplifier can be provided at the factory instead of the terminal box
- Due to the arrangement of the measuring spokes, bending moments of up to 200 Nm can be absorbed

The torque sensor TD175 is used in test benches for measuring the reaction torque. (Wired, non-rotating).
The torque sensor consists of two flanges, which are connected with each other via 4 measuring spokes. The two flanges have the same pitch circle Æ 149mm. The centerings are designed as an external and internal collar with Ø114,3.
Due to the large diameter of the torque sensor TD175 and the arrangement of the measuring spokes in the axial direction, this torque sensor can also absorb bending moments up to 200 Nm, which are caused by the dead weight of the drive motor.
The connection is made via a terminal box with M12 connectors.
Optionally, a GSV-1A measuring amplifier can be provided on the factory side instead of the terminal box so that the sensor has a voltage or current output of ± 10V or 12mA ± 8mA.

ME-Meßsysteme GmbH
Eduard-Maurer-Str. 9
DE-16761 Hennigsdorf

Tel: +49 (0)3302 8982 4 10
Mail: vertrieb@me-systeme.de
Web: www.me-systeme.de

Stand: 20.03.2026

Technical Drawing

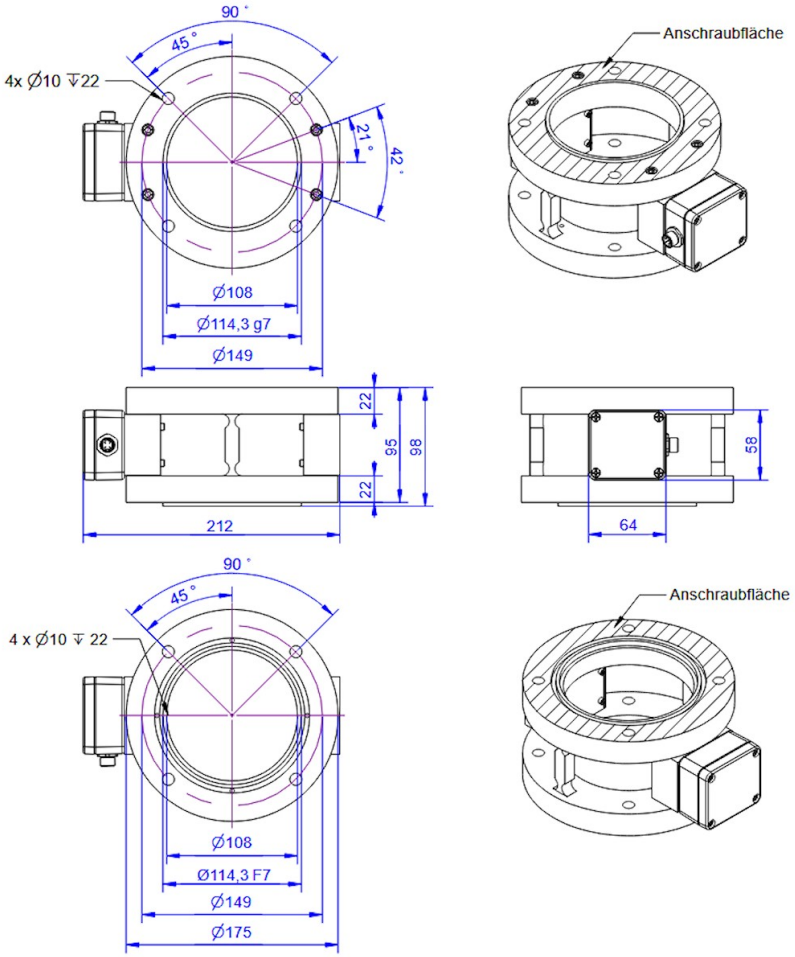

Technical Data

Basic Data		Unit
Type	Biegefeder	
Rated torque	10	Nm
Bending moment limit	200	Nm
Maximum operating torque	150	%FS
Breaking torque	400	%FS
Rated torsion angle	0.7	°/FS
Axial force limit	500	N
Lateral force limit	500	N
Torque introduction	pitch circle	
Dimension (torque introduction)	Ø149	
sensor fastening	pitch circle	
Dimension 2	Ø149	
Diameter	175	mm
length	98	mm
Material	alluminum-alloy	
Dimensions	Ø 175mm x 98mm	
Variants	10Nm... 150Nm	

ME-Meßsysteme GmbH
Eduard-Maurer-Str. 9
DE-16761 Hennigsdorf

Tel: +49 (0)3302 8982 4 10
Mail: vertrieb@me-systeme.de
Web: www.me-systeme.de

Stand: 20.03.2026

Electrical Data		Unit
Input resistance	700	Ohm
Tolerance input resistance	10	Ohm
Output resistance	700	Ohm
Tolerance output resistance	10	Ohm
Insulation resistance	5	GOhm
Rated range of excitation voltage from	2.5	V
Rated range of excitation voltage to	5	V
Operating range of excitation voltage from	1	V
Operating range of excitation voltage to	10	V
Zero signal	0.05	mV/V
Rated output	1	mV/V / FS
Characteristic value range from	0	mV/V / FS

Accuracy Data		Unit
Accuracy class	0,1	
Relative linearity error	0.1	%FS
Relative zero signal hysteresis	0.1	%FS
Temperature effect on zero signal	0.01	%FS/K
Temperature effect on characteristic value	0.01	%RD/K
Relative creep	0.05	%FS

Environmental Data	Unit

Abbreviation : RD: „Reading“; FS: „Full Scale“;1) The exact nominal sensitivity is indicated in the test report;

ME-Meßsysteme GmbH
Eduard-Maurer-Str. 9
DE-16761 Hennigsdorf

Tel: +49 (0)3302 8982 4 10
Mail: vertrieb@me-systeme.de
Web: www.me-systeme.de

Stand: 20.03.2026

Pin Assignment

Channel	Symbol	Description	Wire color	PIN
	+Us	positive bridge supply	brown	1
	-Us	negative bridge supply	white	2
	+Ud	positive bridge output	blue	3
	-Ud	negative bridge output	black	4

Compressive load: positive output signal. Shield connected to sensor housing.

ME-Meßsysteme GmbH
Eduard-Maurer-Str. 9
DE-16761 Hennigsdorf

Tel: +49 (0)3302 8982 4 10
Mail: vertrieb@me-systeme.de
Web: www.me-systeme.de

Stand: 20.03.2026