Force Sensor KS180 30kN/138

Item number: 3814

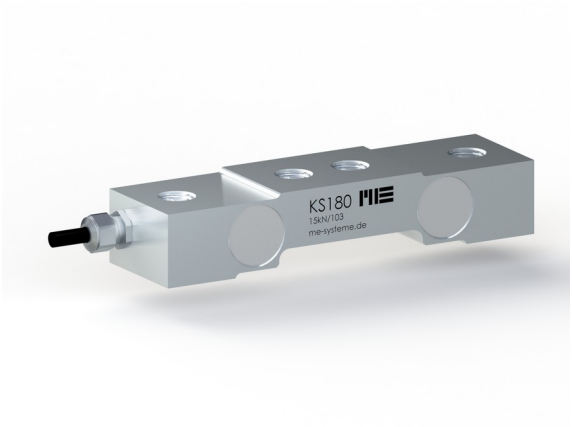

The KS180 force sensor is suitable for measuring forces between two bearing surfaces.

For example, this force sensor is used to measure the bearing force of pedestal bearings. The dimensions of the force sensor match the standard “LASE” pedestal bearing housing units by INA.

Other dimensions can be produced on request according to designs.

Optional special version

- Protection class IP68: from rated force 200 N
- Temperature range: -40°C to 180°C
- Suitable for cleanrooms

ME-Meßsysteme GmbH
Eduard-Maurer-Str. 9
DE-16761 Hennigsdorf

Tel: +49 (0)3302 8982 4 10
Mail: vertrieb@me-systeme.de
Web: www.me-systeme.de

Stand: 20.03.2026

Technical Drawing

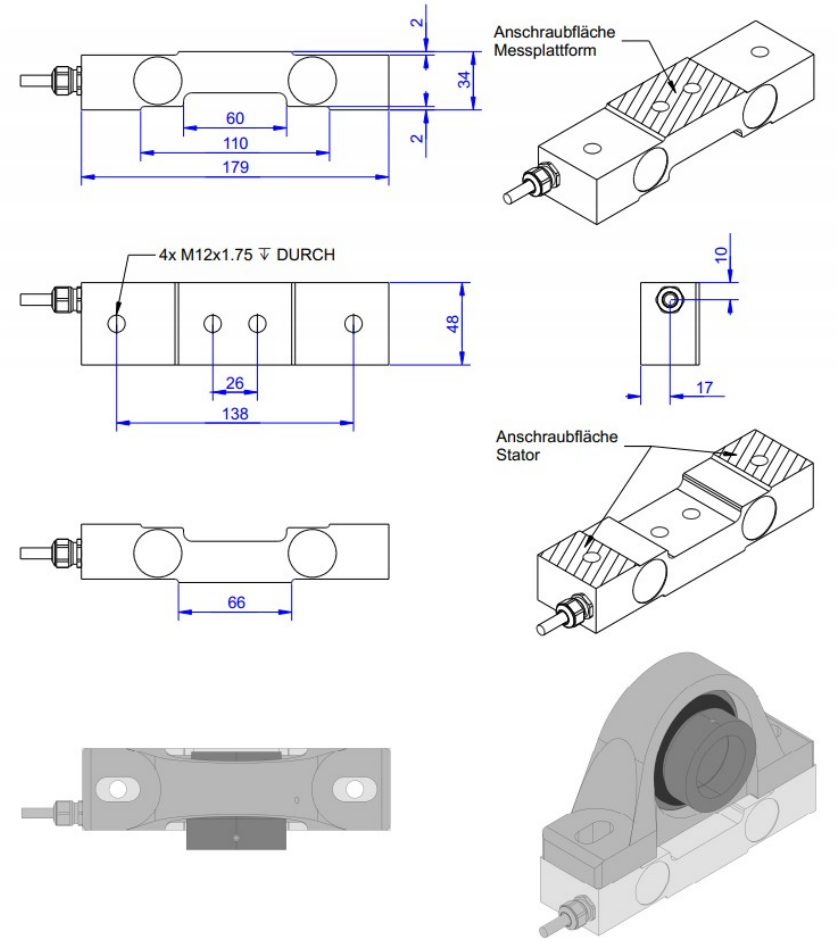

Technical Data

Basic Data		Unit
Type	Kraftsensor	
Force direction	Tension/Compression	
Rated force Fx	30	kN
Force introduction	Internal thread	
Dimension 1	2xM12x1,75	
Sensor Fastening	Internal thread	
Dimension 2	2xM12x1,75	
Operating force	150	%FS
Rated displacement	0.1	mm
Lateral force limit	8	kN
Surface	Galvanisch verzinkt	
Dimensions	130mm x 3mm x 25mm...200mm x 54mm x 34mm	
Height	34	mm
Length or Diameter	200	mm
Bending moment limit	100	Nm
Variants	5kN... 30kN	

ME-Meßsysteme GmbH
Eduard-Maurer-Str. 9
DE-16761 Hennigsdorf

Tel: +49 (0)3302 8982 4 10
Mail: vertrieb@me-systeme.de
Web: www.me-systeme.de

Stand: 20.03.2026

Electrical Data		Unit
Input resistance	390	Ohm
Tolerance input resistance	40	Ohm
Output resistance	350	Ohm
Insulation resistance	2	GOhm
Rated range of excitation voltage from	2.5	V
Rated range of excitation voltage to	5	V
Operating range of excitation voltage from	1	V
Operating range of excitation voltage to	10	V
Zero signal	0.05	mV/V
Characteristic value range from	0.6	mV/V
Characteristic value range to	1.1	mV/V

Accuracy Data		Unit
Accuracy class	0,5	
Relative linearity error	0.1	%FS
Relative zero signal hysteresis	0.1	%FS
Temperature effect on zero signal	0.01	%FS/K
Temperature effect on characteristic value	0.02	%RD/K
Relative creep	0.1	%FS
Environmental Data		**Unit**
Rated temperature range from	-10	°C
Rated temperature range to	70	°C
Operating temperature range from	-10	°C
Operating temperature range to	85	°C
Storage temperature range from	-10	°C
Storage temperature range to	85	°C
Environmental protection	IP65	

Abbreviation : RD: „Reading“; FS: „Full Scale“;1) The exact nominal sensitivity is indicated in the test report.

ME-Meßsysteme GmbH
Eduard-Maurer-Str. 9
DE-16761 Hennigsdorf

Tel: +49 (0)3302 8982 4 10
Mail: vertrieb@me-systeme.de
Web: www.me-systeme.de

Stand: 20.03.2026

Pin Assignment

Channel	Symbol	Description	Wire color	PIN
	+Us	positive bridge supply	brown	
	-Us	negative bridge supply	white	
	+Ud	positive bridge output	green	
	-Ud	negative bridge output	yellow	

Screen - transparent. Pressure load: positive output signal

ME-Meßsysteme GmbH
Eduard-Maurer-Str. 9
DE-16761 Hennigsdorf

Tel: +49 (0)3302 8982 4 10
Mail: vertrieb@me-systeme.de
Web: www.me-systeme.de

Stand: 20.03.2026