# Force Sensor KR80 250kg

Item number: 892



The load cell KR80 is a precision load cell in cylindrical design. It is hermetically sealed by means od welding and available in a calibratable design according to the European requirements OIML R-60 up to class C6. It stands out thanks to its particularly low measurement path of just 0.1mm.
The environmental protection is IP 66.
Force transmission is realised by a cylindrical load knob that has to be inserted into the hole ØD2.
Optionally pendular bases for applications in weighing technology can be installed.

ME-Meßsysteme GmbH
Eduard-Maurer-Str. 9
DE-16761 Hennigsdorf

Tel: +49 (0)3302 8982 4 10
Mail: vertrieb@me-systeme.de
Web: www.me-systeme.de

Stand: 20.03.2026

## Technical Drawing

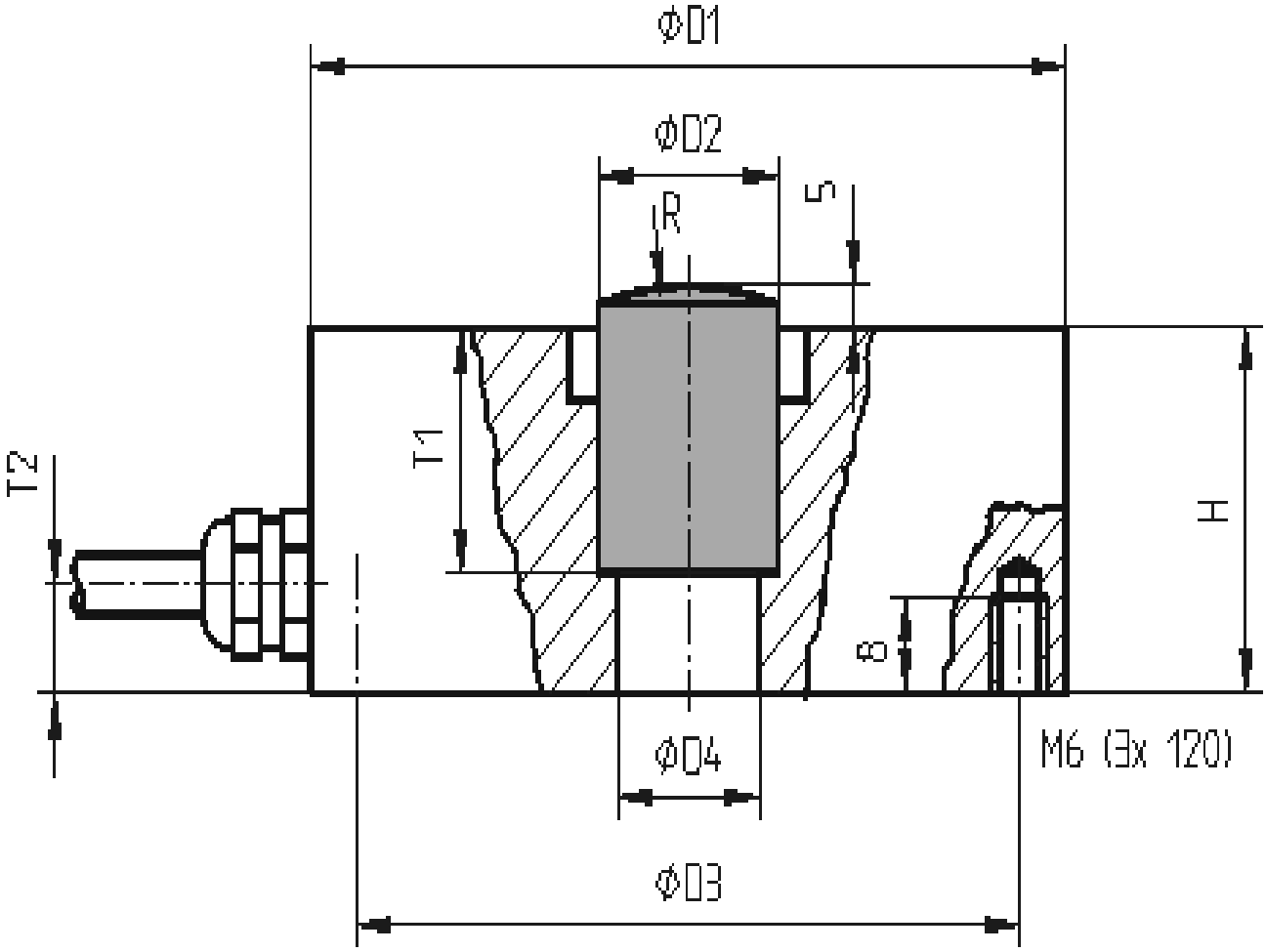


ME-Meßsysteme GmbH
Eduard-Maurer-Str. 9
DE-16761 Hennigsdorf

Tel: +49 (0)3302 8982 4 10
Mail: vertrieb@me-systeme.de
Web: www.me-systeme.de

Stand: 20.03.2026

## Technical Data

| Basic Data | | Unit |
|---|---|---|
| Type | Wägezelle | |
| Force direction | Compression | |
| Rated force Fx | 250 | kg |
| Force introduction | Load button | |
| Operating force | 150 | %FS |
| Material | Stainless steel | |
| Dimensions | Ø80 mm x 25 mm... Ø95 mm x 35 mm | |
| Height | 25 | mm |
| Length or Diameter | 80 | mm |
| Breaking force | 300 | %Fn |
| Variants | 0.25t... 10t | |

| Electrical Data | | Unit |
|---|---|---|
| Input resistance | 1110 | Ohm |
| Tolerance input resistance | 50 | Ohm |
| Output resistance | 1025 | Ohm |
| Tolerance output resistance | 25 | Ohm |
| Insulation resistance | >5x10^9 | Ohm |
| Rated output | 2 | mV/V / FS |

ME-Meßsysteme GmbH
Eduard-Maurer-Str. 9
DE-16761 Hennigsdorf

Tel: +49 (0)3302 8982 4 10
Mail: vertrieb@me-systeme.de
Web: www.me-systeme.de

Stand: 20.03.2026

| Accuracy Data | | Unit |
|---|---|---|

| Environmental Data | | Unit |
|---|---|---|
| Rated temperature range from | -10 | °C |
| Rated temperature range to | 40 | °C |
| Operating temperature range from | -30 | °C |
| Operating temperature range to | 70 | °C |
| Storage temperature range from | -50 | °C |
| Storage temperature range to | 80 | °C |
| Environmental protection | IP66 | |

Abbreviation : RD: „Reading“; FS: „Full Scale“;1) The exact nominal sensitivity is indicated in the test report.

## Pin Assignment

| Channel | Symbol | Description | Wire color | PIN |
|---|---|---|---|---|
| | +Us | positive bridge supply | pink | |
| | -Us | negative bridge supply | grey | |
| | +Ud | positive bridge output | brown | |
| | -Ud | negative bridge output | white | |

Pressure load: positive output signal.Shield- transparent.

ME-Meßsysteme GmbH
Eduard-Maurer-Str. 9
DE-16761 Hennigsdorf

Tel: +49 (0)3302 8982 4 10
Mail: vertrieb@me-systeme.de
Web: www.me-systeme.de

Stand: 20.03.2026