Force Sensor KR80 10t

Item number: 1164



The load cell KR80 is a precision load cell in cylindrical design. It is hermetically sealed by means od welding and available in a calibratable design according to the European requirements OIML R-60 up to class C6. It stands out thanks to its particularly low measurement path of just 0.1mm.
The environmental protection is IP 66.
Force transmission is realised by a cylindrical load knob that has to be inserted into the hole ØD2.
Optionally pendular bases for applications in weighing technology can be installed.

ME-Meßsysteme GmbH
Eduard-Maurer-Str. 9
DE-16761 Hennigsdorf

Tel: +49 (0)3302 8982 4 10
Mail: vertrieb@me-systeme.de
Web: www.me-systeme.de

Stand: 20.03.2026

Technical Drawing

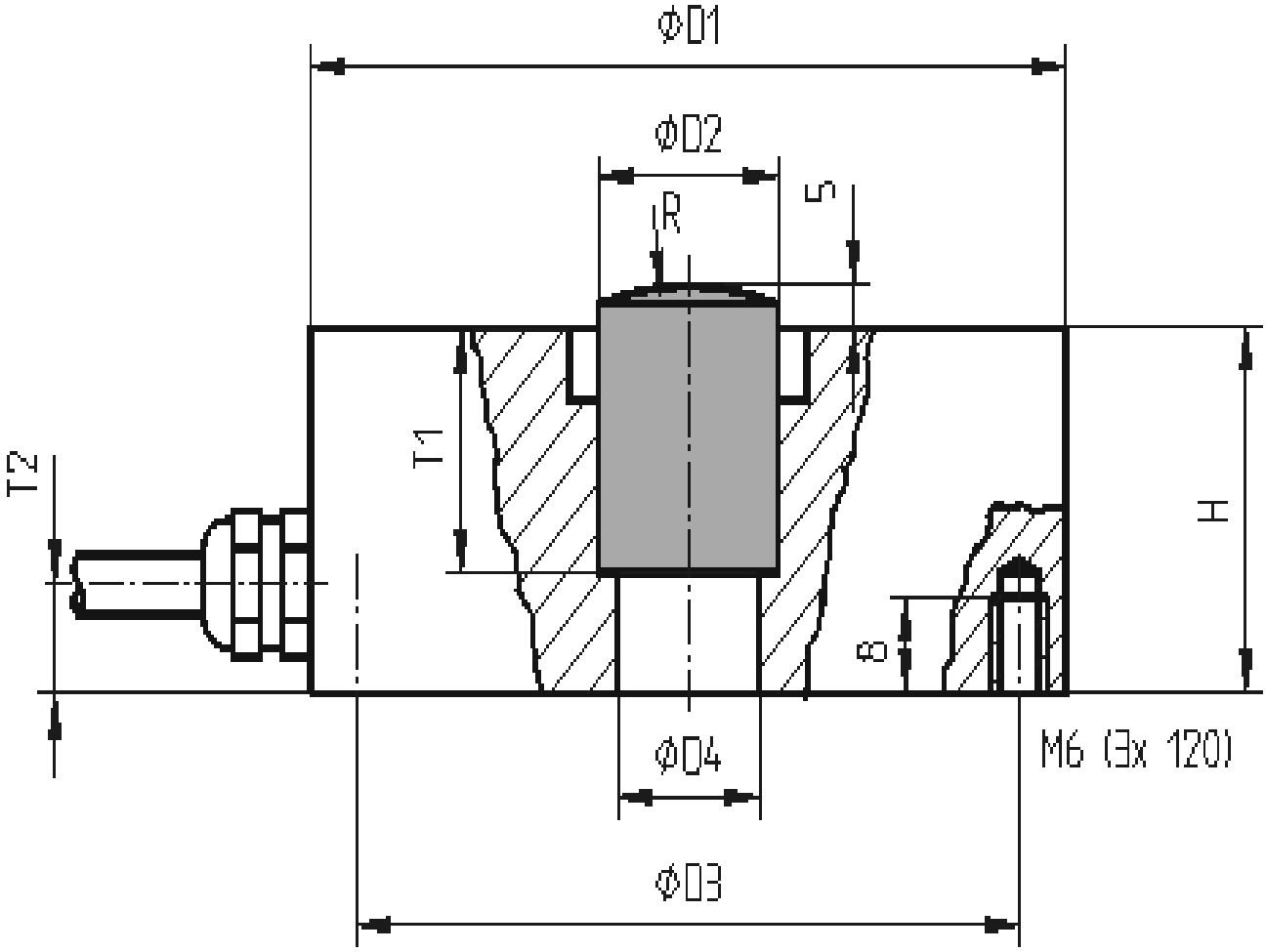

ME-Meßsysteme GmbH
Eduard-Maurer-Str. 9
DE-16761 Hennigsdorf

Tel: +49 (0)3302 8982 4 10
Mail: vertrieb@me-systeme.de
Web: www.me-systeme.de

Stand: 20.03.2026

Technical Data

Basic Data		Unit
Type	Wägezelle	
Force direction	Compression	
Rated force Fx	10	t
Force introduction	Load button	
Operating force	150	%FS
Material	Stainless steel	
Dimensions	Ø80 mm x 25 mm... Ø95 mm x 35 mm	
Height	35	mm
Length or Diameter	95	mm
Breaking force	300	%Fn
Variants	0.25t... 10t	

Electrical Data		Unit
Input resistance	1110	Ohm
Tolerance input resistance	50	Ohm
Output resistance	1025	Ohm
Tolerance output resistance	25	Ohm
Insulation resistance	>5x10^9	Ohm
Rated output	2	mV/V / FS

ME-Meßsysteme GmbH
Eduard-Maurer-Str. 9
DE-16761 Hennigsdorf

Tel: +49 (0)3302 8982 4 10
Mail: vertrieb@me-systeme.de
Web: www.me-systeme.de

Stand: 20.03.2026

Accuracy Data	Unit

Environmental Data		Unit
Rated temperature range from	-10	°C
Rated temperature range to	40	°C
Operating temperature range from	-30	°C
Operating temperature range to	70	°C
Storage temperature range from	-50	°C
Storage temperature range to	80	°C
Environmental protection	IP66	

Abbreviation : RD: „Reading“; FS: „Full Scale“;1) The exact nominal sensitivity is indicated in the test report.

Pin Assignment

Channel	Symbol	Description	Wire color	PIN
	+Us	positive bridge supply	pink	
	-Us	negative bridge supply	grey	
	+Ud	positive bridge output	brown	
	-Ud	negative bridge output	white	

Pressure load: positive output signal.Shield- transparent.

ME-Meßsysteme GmbH
Eduard-Maurer-Str. 9
DE-16761 Hennigsdorf

Tel: +49 (0)3302 8982 4 10
Mail: vertrieb@me-systeme.de
Web: www.me-systeme.de

Stand: 20.03.2026