Force Sensor KR55 2kN

Item number: 11169



Highlights

- compact dimensions diameter 55mm x 27 mm
- accuracy class 0,05
- robust cable suitable for drag chains
- continuous thread M10 for the introduction of tension / compression

Due to its compact design, the KR55 ring torsion force sensor is ideally suited for testing tasks in quality assurance and materials testing.

The KR55 force sensor is available in versions with tensile forces and compressive forces from 1kN to 10kN. The 20kN variant can be loaded up to 20kN in compression and up to 10kN in tension.

Optional special version

- Protection class IP68: from rated force 200 N
- Temperature range: -40°C to 180°C
- Vacuum version from 10^{-5} mbar
- Pressure range up to 8 bar
- Suitable for cleanrooms

ME-Meßsysteme GmbH
Eduard-Maurer-Str. 9
DE-16761 Hennigsdorf

Tel: +49 (0)3302 8982 4 10
Mail: vertrieb@me-systeme.de
Web: www.me-systeme.de

Stand: 31.03.2026

Technical Drawing

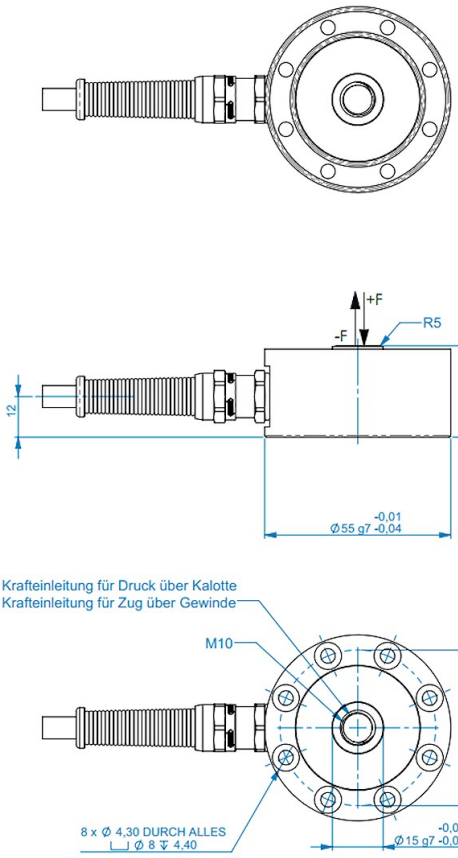

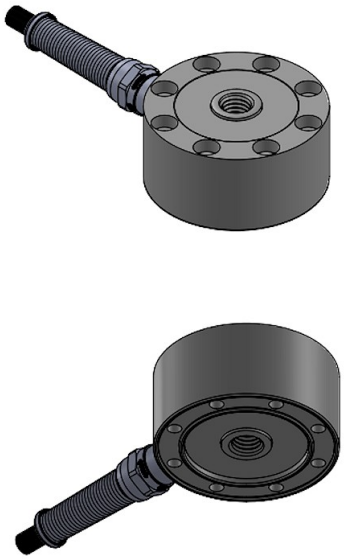

ME-Meßsysteme GmbH
Eduard-Maurer-Str. 9
DE-16761 Hennigsdorf

Tel: +49 (0)3302 8982 4 10
Mail: vertrieb@me-systeme.de
Web: www.me-systeme.de

Stand: 31.03.2026

Technical Data

Basic Data		Unit
Type	Kraftsensor	
Force direction	Tension/Compression	
Rated force Fx	2	kN
Force introduction	Internal thread	
Dimension 1	M10	
Sensor Fastening	Circular ring	
Dimension 2	8x M4, Teilkreis Ø46	
Operating force	150	%FS
Rated displacement	0.009	mm
Lateral force limit	150	%FS
Material	Stainless steel	
Natural frequency fx	6.85	kHz
Dimensions	Ø55mm x 27mm	
Torque limit	8	Nm
Bending moment limit	20	Nm
Variants	1kN... 20kN	

ME-Meßsysteme GmbH
Eduard-Maurer-Str. 9
DE-16761 Hennigsdorf

Tel: +49 (0)3302 8982 4 10
Mail: vertrieb@me-systeme.de
Web: www.me-systeme.de

Stand: 31.03.2026

Electrical Data		Unit
Input resistance	760	Ohm
Tolerance input resistance	60	Ohm
Output resistance	700	Ohm
Tolerance output resistance	10	Ohm
Insulation resistance	5	GOhm
Rated range of excitation voltage from	2.5	V
Rated range of excitation voltage to	5	V
Operating range of excitation voltage from	1	V
Operating range of excitation voltage to	10	V
Zero signal tolerance	0.05	mV/V
Rated output	1	mV/V / FS

Accuracy Data		Unit
Accuracy class	0,05	
Relative linearity error	0.02	%FS
Relative zero signal hysteresis	0.02	%FS
Temperature effect on zero signal	0.02	%FS/K
Temperature effect on characteristic value	0.01	%RD/K
Relative creep	0.1	%FS
Environmental Data		**Unit**
Rated temperature range from	-10	°C
Rated temperature range to	70	°C
Operating temperature range from	-10	°C
Operating temperature range to	85	°C
Storage temperature range from	-10	°C
Storage temperature range to	85	°C
Environmental protection	IP65	

Abbreviation: RD: "Reading"; FS: "Full Scale";
The exact nominal sensitivity is indicated in the test report;

ME-Meßsysteme GmbH
Eduard-Maurer-Str. 9
DE-16761 Hennigsdorf

Tel: +49 (0)3302 8982 4 10
Mail: vertrieb@me-systeme.de
Web: www.me-systeme.de

Stand: 31.03.2026

Pin Assignment

Channel	Symbol	Description	Wire color	PIN
	+Us	positive bridge supply	brown	
	-Us	negative bridge supply	white	
	+Ud	positive bridge output	green	
	-Ud	negative bridge output	yellow	

Compressive load: positive output signal. Shield: transparent.

ME-Meßsysteme GmbH
Eduard-Maurer-Str. 9
DE-16761 Hennigsdorf

Tel: +49 (0)3302 8982 4 10
Mail: vertrieb@me-systeme.de
Web: www.me-systeme.de

Stand: 31.03.2026