# Force Sensor KR29 5kN

Item number: 12385



## Optional special version

- Protection class IP68: from rated force 200 N
- Pressure range up to 8 bar
- Suitable for cleanrooms

ME-Meßsysteme GmbH
Eduard-Maurer-Str. 9
DE-16761 Hennigsdorf

Tel: +49 (0)3302 8982 4 10
Mail: vertrieb@me-systeme.de
Web: www.me-systeme.de

Stand: 20.03.2026

## Technical Drawing

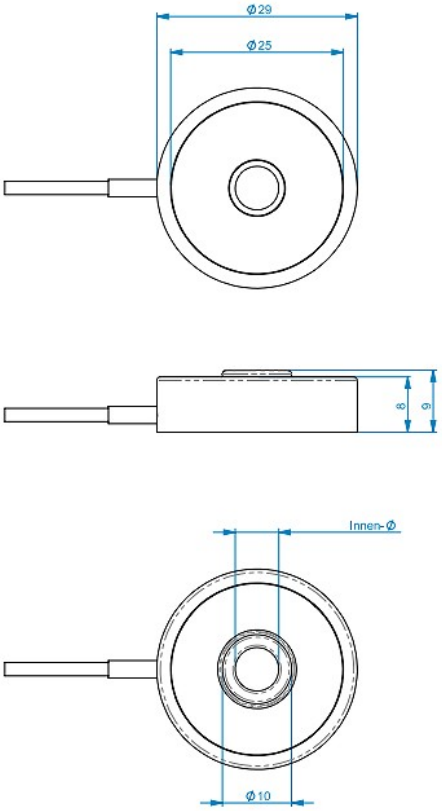


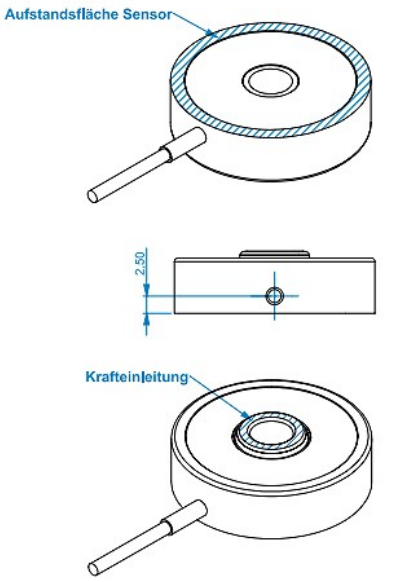


| Last | Innen-Ø |
|---|---|
| 10kN | 6,30 |
| 5kN | 5,30 |
| 2kN | 4,30 |

ME-Meßsysteme GmbH
Eduard-Maurer-Str. 9
DE-16761 Hennigsdorf

Tel: +49 (0)3302 8982 4 10
Mail: vertrieb@me-systeme.de
Web: www.me-systeme.de

Stand: 20.03.2026

## Technical Data

| Basic Data | | Unit |
|---|---|---|
| Type | Kraftsensor | |
| Force direction | Compression | |
| Rated force Fx | 5 | kN |
| Force introduction | Innendurchmesser | |
| Dimension 1 | 5,3 mm | |
| Sensor Fastening | Ringfläche | |
| Dimension 2 | Ø29 | |
| Operating force | 8 | kN |
| Rated displacement | 0.05 | mm |
| Lateral force limit | 5 | kN |
| Material | Stainless steel | |
| Natural frequency fx | 31 | kHz |
| Dimensions | Ø 29 mm x 9 mm | |
| Height | 9 | mm |
| Length or Diameter | 29 | mm |
| Torque limit | 30 | Nm |
| Bending moment limit | 15 | Nm |
| Variants | 2kN... 10kN | |

| Electrical Data | | Unit |
|---|---|---|
| Rated output | 1 | mV/V |

ME-Meßsysteme GmbH
Eduard-Maurer-Str. 9
DE-16761 Hennigsdorf

Tel: +49 (0)3302 8982 4 10
Mail: vertrieb@me-systeme.de
Web: www.me-systeme.de

Stand: 20.03.2026

| Accuracy Data | | Unit |
|---|---|---|
| Accuracy class | 1 | |
| **Environmental Data** | | **Unit** |
| Rated temperature range from | -10 | °C |
| Rated temperature range to | 70 | °C |
| Operating temperature range from | -10 | °C |
| Operating temperature range to | 85 | °C |
| Storage temperature range from | -10 | °C |
| Storage temperature range to | 85 | °C |
| Environmental protection | IP65 | |

Abbreviation : RD: „Reading“; FS: „Full Scale“;1) The exact nominal sensitivity is indicated in the test report.

ME-Meßsysteme GmbH
Eduard-Maurer-Str. 9
DE-16761 Hennigsdorf

Tel: +49 (0)3302 8982 4 10
Mail: vertrieb@me-systeme.de
Web: www.me-systeme.de

Stand: 20.03.2026