Force Sensor KR29 2kN/HT

Item number: 12382

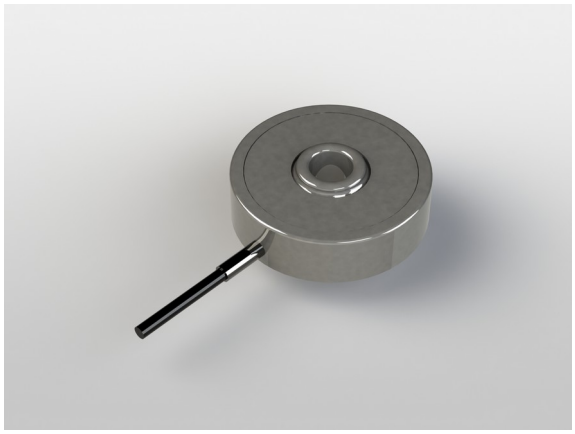

Optional special version

- Protection class IP68: from rated force 200 N
- Pressure range up to 8 bar
- Suitable for cleanrooms

ME-Meßsysteme GmbH
Eduard-Maurer-Str. 9
DE-16761 Hennigsdorf

Tel: +49 (0)3302 8982 4 10
Mail: vertrieb@me-systeme.de
Web: www.me-systeme.de

Stand: 21.04.2026

Technical Drawing

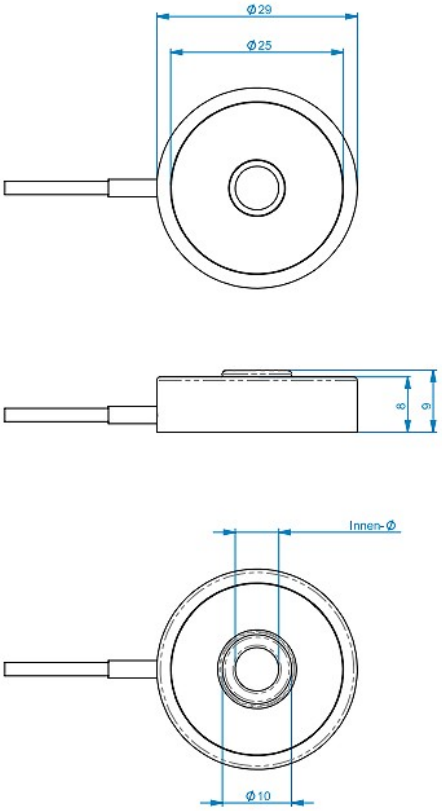

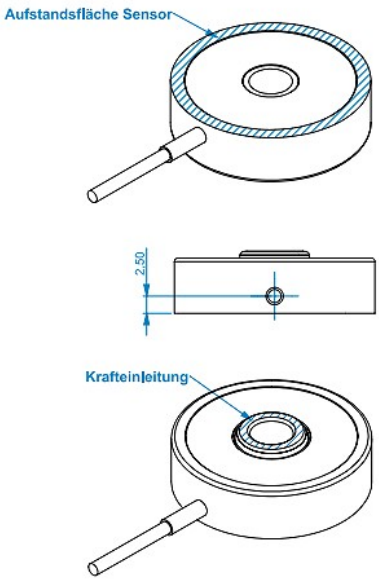

Last	Innen-Ø
10kN	6,30
5kN	5,30
2kN	4,30

ME-Meßsysteme GmbH
Eduard-Maurer-Str. 9
DE-16761 Hennigsdorf

Tel: +49 (0)3302 8982 4 10
Mail: vertrieb@me-systeme.de
Web: www.me-systeme.de

Stand: 21.04.2026

Technical Data

Basic Data		Unit
Type	Kraftsensor	
Force direction	Compression	
Rated force Fx	2	kN
Force introduction	Innendurchmesser	
Dimension 1	4,3 mm	
Sensor Fastening	Ringfläche	
Dimension 2	Ø29	
Operating force	4	kN
Rated displacement	0.05	mm
Lateral force limit	4	kN
Material	Stainless steel	
Natural frequency fx	23	kHz
Dimensions	Ø 29 mm x 9 mm	
Height	9	mm
Length or Diameter	29	mm
Torque limit	20	Nm
Bending moment limit	10	Nm
Variants	2kN... 10kN	

Electrical Data		Unit
Rated output	1	mV/V

ME-Meßsysteme GmbH
Eduard-Maurer-Str. 9
DE-16761 Hennigsdorf

Tel: +49 (0)3302 8982 4 10
Mail: vertrieb@me-systeme.de
Web: www.me-systeme.de

Stand: 21.04.2026

Accuracy Data		Unit
Accuracy class	1	
Environmental Data		**Unit**
Rated temperature range from	-20	°C
Rated temperature range to	150	°C
Operating temperature range from	-40	°C
Operating temperature range to	180	°C
Storage temperature range from	-20	°C
Storage temperature range to	85	°C
Environmental protection	IP65	

Abbreviation : RD: „Reading“; FS: „Full Scale“;1) The exact nominal sensitivity is indicated in the test report.

ME-Meßsysteme GmbH
Eduard-Maurer-Str. 9
DE-16761 Hennigsdorf

Tel: +49 (0)3302 8982 4 10
Mail: vertrieb@me-systeme.de
Web: www.me-systeme.de

Stand: 21.04.2026