# Force Sensor KR20 100kN/M16

Item number: 4188

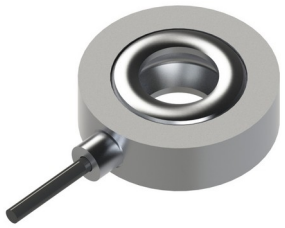

The force measurement ring KR20 was developed especially for fastener testing and for examining preload forces on screws.

Because of its very low construction height, the sensor is equipped with a Teflon cable with an outer diameter of just 1.8mm.

The force measurement ring is equipped with a strain gauge that covers the entire area. A high level of repeatability is thus achieved in various installation positions. The force measurement ring has a Sub-D-15 plug connection containing internal trimming resistors.

The force measurement ring is supplied with a detailed factory certificate (5 points, 3 measurement series in 3 installation positions).

ME-Meßsysteme GmbH
Eduard-Maurer-Str. 9
DE-16761 Hennigsdorf

Tel: +49 (0)3302 8982 4 10
Mail: vertrieb@me-systeme.de
Web: www.me-systeme.de

Stand: 04.02.2026

## Technical Drawing

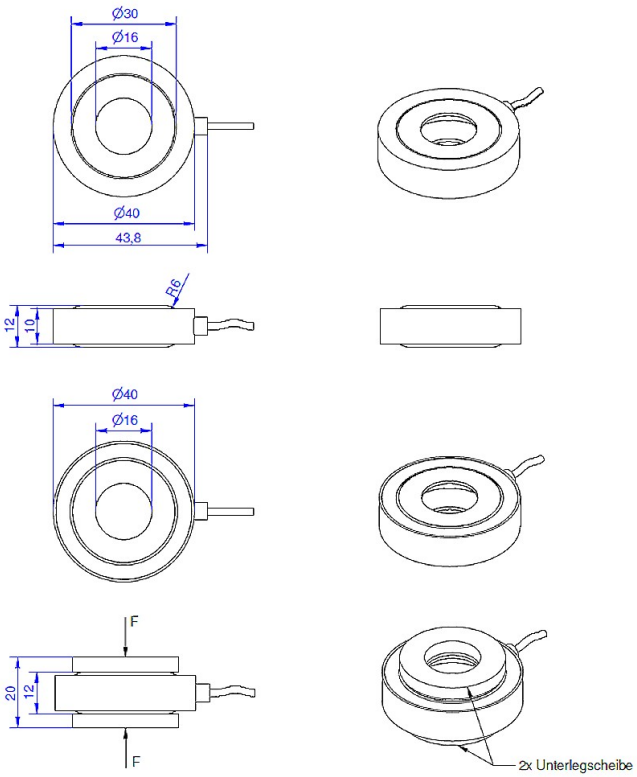

## Technical Data

| Basic Data | | Unit |
|---|---|---|
| Type | Kraftsensor | |
| Force direction | Compression | |
| Rated force Fx | 100 | kN |
| Force introduction | Through-hole | |
| Dimension 1 | Ø16 | |
| Sensor Fastening | Through-hole | |
| Dimension 2 | Ø16 | |
| Operating force | 150 | %FS |
| Material | Stainless steel | |
| Dimensions | Ø 16 mm x 7 mm...Ø 40 mm x 12 mm | |
| Height | 12 | mm |
| Length or Diameter | 40 | mm |
| Variants | 5kN... 20kN | |

| Electrical Data | | Unit |
|---|---|---|
| Input resistance | 2 | kOhm |
| Tolerance input resistance | 50 | Ohm |
| Output resistance | 2 | kOhm |
| Tolerance output resistance | 50 | Ohm |
| Insulation resistance | 5 | GOhm |
| Rated range of excitation voltage from | 2.5 | V |
| Rated range of excitation voltage to | 5 | V |
| Operating range of excitation voltage from | 1 | V |
| Operating range of excitation voltage to | 10 | V |
| Zero signal | 0.05 | mV/V |
| Characteristic value range from | 0.3 | mV/V / FS |
| Characteristic value range to | 1.4 | mV/V / FS |

ME-Meßsysteme GmbH
Eduard-Maurer-Str. 9
DE-16761 Hennigsdorf

Tel: +49 (0)3302 8982 4 10
Mail: vertrieb@me-systeme.de
Web: www.me-systeme.de

Stand: 04.02.2026

| Accuracy Data | | Unit |
|---|---|---|
| Accuracy class | 2 | |
| Relative linearity error | 1.4 | %FS |
| Relative zero signal hysteresis | 0.1 | %FS |
| Temperature effect on zero signal | 0.8 | %FS/K |
| Temperature effect on characteristic value | 0.8 | %RD/K |
| Relative creep | 0.05 | %FS |
| **Environmental Data** | | **Unit** |
| Rated temperature range from | -10 | °C |
| Rated temperature range to | 70 | °C |
| Operating temperature range from | -10 | °C |
| Operating temperature range to | 85 | °C |
| Storage temperature range from | -10 | °C |
| Storage temperature range to | 85 | °C |
| Environmental protection | IP65 | |

Abbreviation : RD: „Reading"; FS: „Full Scale";1) The exact nominal sensitivity is indicated in the test report.

## Pin Assignment

| Channel | Symbol | Description | Wire color | PIN |
|---|---|---|---|---|
| | +Us | positive bridge supply | red | |
| | -Us | negative bridge supply | black | |
| | +Ud | positive bridge output | green | |
| | -Ud | negative bridge output | white | |

Cable with Sub-D15 connector.Pressure load: positive output signal.Shield- transparent.

ME-Meßsysteme GmbH
Eduard-Maurer-Str. 9
DE-16761 Hennigsdorf

Tel: +49 (0)3302 8982 4 10
Mail: vertrieb@me-systeme.de
Web: www.me-systeme.de

Stand: 04.02.2026