Force Sensor KR20 100kN/M12

Item number: 4029

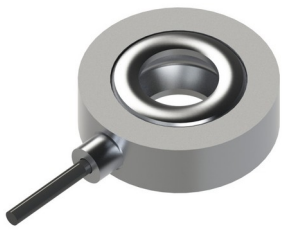

The force measurement ring KR20 was developed especially for fastener testing and for examining preload forces on screws.

Because of its very low construction height, the sensor is equipped with a Teflon cable with an outer diameter of just 1.8mm.

The force measurement ring is equipped with a strain gauge that covers the entire area. A high level of repeatability is thus achieved in various installation positions. The force measurement ring has a Sub-D-15 plug connection containing internal trimming resistors.

The force measurement ring is supplied with a detailed factory certificate (5 points, 3 measurement series in 3 installation positions).

ME-Meßsysteme GmbH
Eduard-Maurer-Str. 9
DE-16761 Hennigsdorf

Tel: +49 (0)3302 8982 4 10
Mail: vertrieb@me-systeme.de
Web: www.me-systeme.de

Stand: 04.02.2026

Technical Drawing

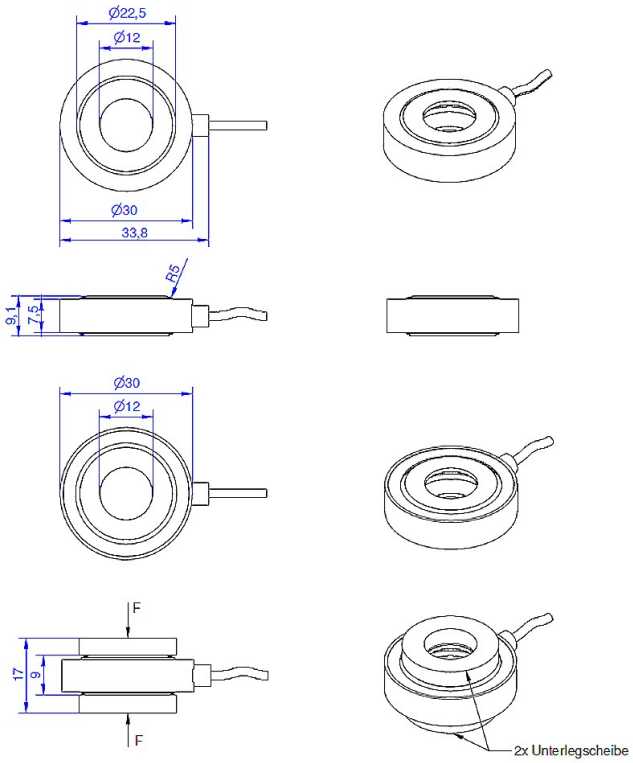

ME-Meßsysteme GmbH
Eduard-Maurer-Str. 9
DE-16761 Hennigsdorf

Tel: +49 (0)3302 8982 4 10
Mail: vertrieb@me-systeme.de
Web: www.me-systeme.de

Stand: 04.02.2026

Technical Data

Basic Data		Unit
Type	Kraftsensor	
Force direction	Compression	
Rated force Fx	100	kN
Force introduction	Through-hole	
Dimension 1	Ø12	
Sensor Fastening	Through-hole	
Dimension 2	Ø12	
Operating force	150	%FS
Material	Stainless steel	
Dimensions	Ø 16 mm x 7 mm...Ø 40 mm x 12 mm	
Height	9	mm
Length or Diameter	30	mm
Variants	5kN... 20kN	

Electrical Data		Unit
Input resistance	2	kOhm
Tolerance input resistance	50	Ohm
Output resistance	2	kOhm
Tolerance output resistance	50	Ohm
Insulation resistance	5	GOhm
Rated range of excitation voltage from	2.5	V
Rated range of excitation voltage to	5	V
Operating range of excitation voltage from	1	V
Operating range of excitation voltage to	10	V
Zero signal	0.05	mV/V
Characteristic value range from	0.3	mV/V / FS
Characteristic value range to	1.4	mV/V / FS

ME-Meßsysteme GmbH
Eduard-Maurer-Str. 9
DE-16761 Hennigsdorf

Tel: +49 (0)3302 8982 4 10
Mail: vertrieb@me-systeme.de
Web: www.me-systeme.de

Stand: 04.02.2026

Accuracy Data		Unit
Accuracy class	2	
Relative linearity error	1.4	%FS
Relative zero signal hysteresis	0.1	%FS
Temperature effect on zero signal	0.8	%FS/K
Temperature effect on characteristic value	0.8	%RD/K
Relative creep	0.05	%FS
Environmental Data		**Unit**
Rated temperature range from	-10	°C
Rated temperature range to	70	°C
Operating temperature range from	-10	°C
Operating temperature range to	85	°C
Storage temperature range from	-10	°C
Storage temperature range to	85	°C
Environmental protection	IP65	

Abbreviation : RD: „Reading"; FS: „Full Scale";1) The exact nominal sensitivity is indicated in the test report.

Pin Assignment

Channel	Symbol	Description	Wire color	PIN
	+Us	positive bridge supply	red	
	-Us	negative bridge supply	black	
	+Ud	positive bridge output	green	
	-Ud	negative bridge output	white	

Cable with Sub-D15 connector.Pressure load: positive output signal.Shield- transparent.

ME-Meßsysteme GmbH
Eduard-Maurer-Str. 9
DE-16761 Hennigsdorf

Tel: +49 (0)3302 8982 4 10
Mail: vertrieb@me-systeme.de
Web: www.me-systeme.de

Stand: 04.02.2026