Force Sensor KR111 1kN/M12

Item number: 17062



Highlights

- Flat design for minimal installation space
- Diameter: Ø111 mm, Height: 30 mm / 31 mm
- Accuracy class: 0.1
- Ring force sensor for tensile and compressive forces
- Convenient mounting from the tool side
- Uniform force application via central opening
- Robust construction for industrial applications
- Ideal for test benches and quality assurance

Ring force sensors are precise sensors for measuring tensile and compressive forces in testing and automation applications. Their particularly flat design makes them ideal for measurement tasks with limited installation space and allows for easy integration into existing designs. Ring force sensors of this type are frequently used in test benches, assembly lines, and material testing applications where a compact design and reliable measurements are crucial.

A key advantage of these sensors is their convenient mounting from the tool side. This allows the sensor to be integrated directly into the force transmission without the need for complex mounting fixtures. The ring shape enables uniform and reproducible force application through the central opening, resulting in stable and precise measurement results.

With their high accuracy, these sensors deliver highly precise measurement data for demanding measurement and testing tasks. The robust mechanical design ensures reliable operation even under industrial operating conditions and repeated load cycles.

A key advantage of these sensors is their convenient tool-side mounting. The combination of compact design, easy integration and high measuring accuracy makes ring force sensors an ideal solution for applications in quality assurance, material testing, automation technology and mechanical engineering.

ME-Meßsysteme GmbH
Eduard-Maurer-Str. 9
DE-16761 Hennigsdorf

Tel: +49 (0)3302 8982 4 10
Mail: vertrieb@me-systeme.de
Web: www.me-systeme.de

Stand: 24.04.2026

Optional special version

- Protection class IP68: from rated force 200 N
- Temperature range: -40°C to 180°C
- Vacuum version from 10^{-5} mbar
- Pressure range up to 8 bar
- Suitable for cleanrooms

ME-Meßsysteme GmbH
Eduard-Maurer-Str. 9
DE-16761 Hennigsdorf

Tel: +49 (0)3302 8982 4 10
Mail: vertrieb@me-systeme.de
Web: www.me-systeme.de

Stand: 24.04.2026

Technical Drawing

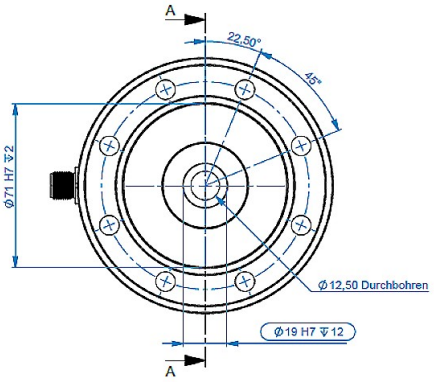

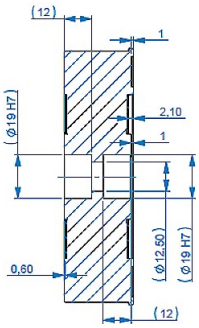

SCHNITT A-A

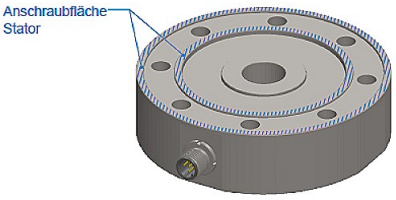

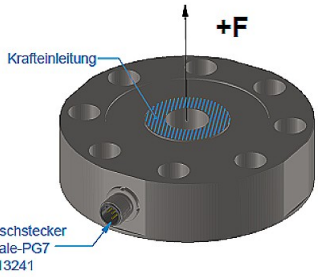

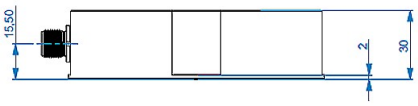

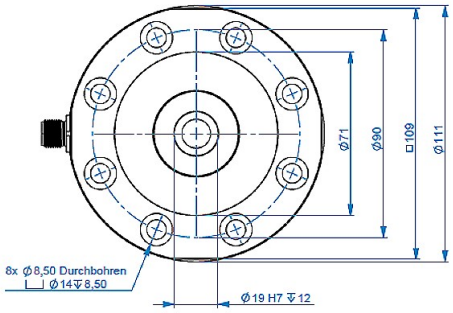

ME-Meßsysteme GmbH
Eduard-Maurer-Str. 9
DE-16761 Hennigsdorf

Tel: +49 (0)3302 8982 4 10
Mail: vertrieb@me-systeme.de
Web: www.me-systeme.de

Stand: 24.04.2026

Technical Data

Basic Data		Unit
Type	Kraftsensor	
Force direction	Tension/Compression	
Rated force Fx	1	kN
Force introduction	Through-hole	
Dimension 1	1 x Ø12,5 mm	
Operating force	150	%FS
Rated displacement	80	µm
Lateral force limit	100	%FS
Material	Stainless steel	
Dimensions	Ø 111 mm x 30 mm	
Height	30	mm
Length or Diameter	111	mm
Variants	1kN... 50kN	

Electrical Data		Unit
Input resistance	750	Ohm
Tolerance input resistance	50	Ohm
Output resistance	700	Ohm
Tolerance output resistance	10	Ohm
Insulation resistance	5	GOhm
Rated range of excitation voltage from	2.5	V
Rated range of excitation voltage to	5	V
Operating range of excitation voltage from	1	V
Operating range of excitation voltage to	10	V
Zero signal	0.05	mV/V
Characteristic value range from	0.8	mV/V / FS
Characteristic value range to	1.2	mV/V / FS

ME-Meßsysteme GmbH
Eduard-Maurer-Str. 9
DE-16761 Hennigsdorf

Tel: +49 (0)3302 8982 4 10
Mail: vertrieb@me-systeme.de
Web: www.me-systeme.de

Stand: 24.04.2026

Accuracy Data		Unit
Accuracy class	0,1	
Relative linearity error	0.02	%FS
Relative zero signal hysteresis	0.02	%FS
Temperature effect on zero signal	0.02	%FS/K
Temperature effect on characteristic value	0.01	%RD/K
Relative creep	0.1	%FS
Environmental Data		**Unit**
Rated temperature range from	-10	°C
Rated temperature range to	70	°C
Operating temperature range from	-10	°C
Operating temperature range to	85	°C
Storage temperature range from	-10	°C
Storage temperature range to	85	°C
Environmental protection	IP65	

Abbreviation: RD: „Reading"; FS: „Full Scale";1) The exact nominal sensitivity is indicated in the test report;

Pin Assignment

Channel	Symbol	Description	Wire color	PIN
	+Us	positive bridge supply		1
	-Us	negative bridge supply		2
	+Ud	positive bridge signal		3
	-Ud	negative bridge signal		4
	n. c.	not connected		5

Compressive load: positive output signal. Shield connected to sensor housing.

ME-Meßsysteme GmbH
Eduard-Maurer-Str. 9
DE-16761 Hennigsdorf

Tel: +49 (0)3302 8982 4 10
Mail: vertrieb@me-systeme.de
Web: www.me-systeme.de

Stand: 24.04.2026