Force Sensor KR110a 100N

Item number: 7092



The force sensor KR110a is suitable for testing in the quality assurance and materials testing due to its compact form.

This precision force sensor is charakterized by flat construction of only 14 mm or 20 mm.

Optional special version

- Protection class IP68: from rated force 200 N
- Temperature range: -40°C to 180°C
- Vacuum version from 10^{-5} mbar
- Pressure range up to 8 bar
- Suitable for cleanrooms

ME-Meßsysteme GmbH
Eduard-Maurer-Str. 9
DE-16761 Hennigsdorf

Tel: +49 (0)3302 8982 4 10
Mail: vertrieb@me-systeme.de
Web: www.me-systeme.de

Stand: 01.04.2026

Technical Drawing

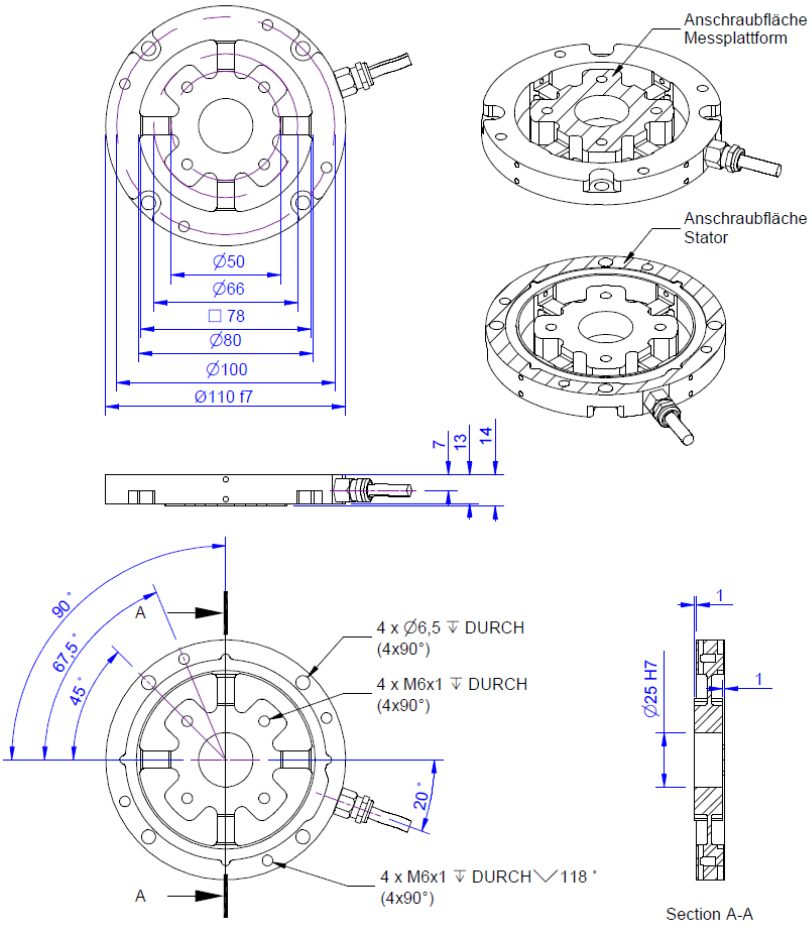

ME-Meßsysteme GmbH
Eduard-Maurer-Str. 9
DE-16761 Hennigsdorf

Tel: +49 (0)3302 8982 4 10
Mail: vertrieb@me-systeme.de
Web: www.me-systeme.de

Stand: 01.04.2026

Technical Data

Basic Data		Unit
Type	Kraftsensor	
Force direction	Tension/Compression	
Rated force Fx	100	N
Force introduction	Internal thread	
Dimension 1	4xM6x1	
Sensor Fastening	Internal thread	
Dimension 2	4xM6x1	
Operating force	200	%FS
Rated displacement	0.2	mm
Lateral force limit	100	%FS
Material	alluminum-alloy	
Natural frequency fx	2	kHz
Dimensions	Ø 110mm x 14mm / Ø 110mm x 20mm	
Height	14	mm
Length or Diameter	110	mm
Torque limit	200	Nm
Bending moment limit	5	Nm
Variants	50N... 5kN	

ME-Meßsysteme GmbH
Eduard-Maurer-Str. 9
DE-16761 Hennigsdorf

Tel: +49 (0)3302 8982 4 10
Mail: vertrieb@me-systeme.de
Web: www.me-systeme.de

Stand: 01.04.2026

Electrical Data		Unit
Input resistance	390	Ohm
Tolerance input resistance	40	±
Output resistance	350	Ohm
Insulation resistance	2x10^9	Ohm
Rated range of excitation voltage from	2.5	V
Rated range of excitation voltage to	5	V
Operating range of excitation voltage from	1	V
Operating range of excitation voltage to	10	V
Zero signal	0.05	mV/V
Rated output	1	mV/V / FS

Accuracy Data		Unit
Accuracy class	0,1	
Relative linearity error	0.02	%FS
Relative zero signal hysteresis	0.02	%FS
Temperature effect on zero signal	0.01	%FS/K
Temperature effect on characteristic value	0.01	%RD/K
Relative creep	0.05	%FS
Environmental Data		**Unit**
Rated temperature range from	-10	°C
Rated temperature range to	70	°C
Operating temperature range from	-10	°C
Operating temperature range to	85	°C
Storage temperature range from	-10	°C
Storage temperature range to	85	°C
Environmental protection	IP66	

Abbreviation: RD: „Reading“; FS: „Full Scale“;1) The exact nominal sensitivity is indicated in the test report;

ME-Meßsysteme GmbH
Eduard-Maurer-Str. 9
DE-16761 Hennigsdorf

Tel: +49 (0)3302 8982 4 10
Mail: vertrieb@me-systeme.de
Web: www.me-systeme.de

Stand: 01.04.2026

Pin Assignment

Channel	Symbol	Description	Wire color	PIN
	+Us	positive bridge supply	brown	
	-Us	negative bridge supply	white	
	+Ud	positive bridge output	green	
	-Ud	negative bridge output	yellow	

Pressure load: positive output signal.
Shield- transparent.

Mounting

Force and torque measurement

The force sensor is excellent suitable for the combination with the torque sensor TD110a or TS110a.

In this case force and torque are applied via an inner ring.



To garantee the accuracy of measurement the following combination of the force sensor KR110a and of the torque sensor TD110a or TS110a is recommended.

Sensor combination	TD110a	TD110a	TD110a	TD110a	TS110a	TS110a

ME-Meßsysteme GmbH
Eduard-Maurer-Str. 9
DE-16761 Hennigsdorf

Tel: +49 (0)3302 8982 4 10
Mail: vertrieb@me-systeme.de
Web: www.me-systeme.de

Stand: 01.04.2026

			5 Nm AL	10 Nm VA	20 Nm VA	/ TS110a 50 Nm VA	100 Nm VA	200 Nm VA
KR110a	200 N	VA	X					
KR110a	500 N	VA		X	X			
KR110a	1000 N	VA			X	X		
KR110a	2000 N	VA				X	X	
KR110a	5000 N	VA						X

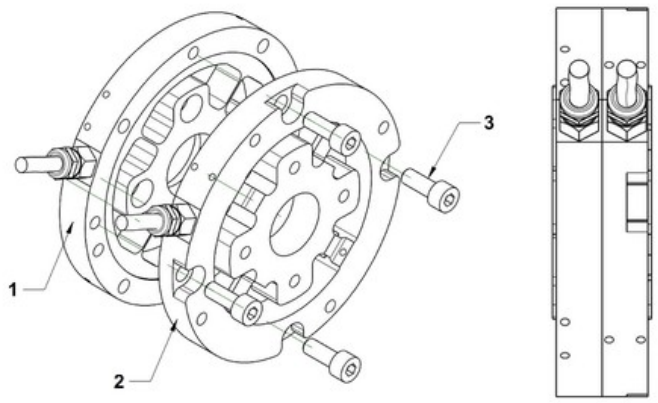

Position	Quantity	Description
1	1	TD110a / TS110a
2	1	KR110a
3	4	Screw ISO 4762 M6x16 A2

ME-Meßsysteme GmbH
Eduard-Maurer-Str. 9
DE-16761 Hennigsdorf

Tel: +49 (0)3302 8982 4 10
Mail: vertrieb@me-systeme.de
Web: www.me-systeme.de

Stand: 01.04.2026