Force Sensor KM65z-IG 5kN/M12

Item number: 13333

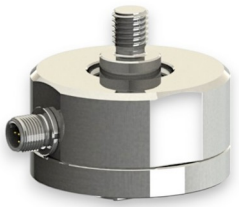

Highlights

- low height of the sensor body
- drag chain compatible connection cable
- or integrated M12 round plug
- protection class IP67

The KM65z force sensor is a tension/compression force sensor in diaphragma construction. He is characterized by

- a low height for the sensor body,
- a central M10 external thread for force introduction for the 2 kN and 5 kN variants
- a central M12 external thread for force introduction for the 10 kN variants
- and 1x central M10 or M12 internal thread for attaching the sensor body.

All variants are available with a permanently installed connection cable, Lapp drag chain cable FD/CP/Plus, or with a permanently installed M12 round plug connector, 4-pin.

The protection class of the sensor is IP 67.

Optional special version

- Protection class IP68: from rated force 200 N
- Temperature range: -40°C to 180°C
- Pressure range up to 8 bar
- Suitable for cleanrooms

ME-Meßsysteme GmbH
Eduard-Maurer-Str. 9
DE-16761 Hennigsdorf

Tel: +49 (0)3302 8982 4 10
Mail: vertrieb@me-systeme.de
Web: www.me-systeme.de

Stand: 10.04.2026

Technical Drawing

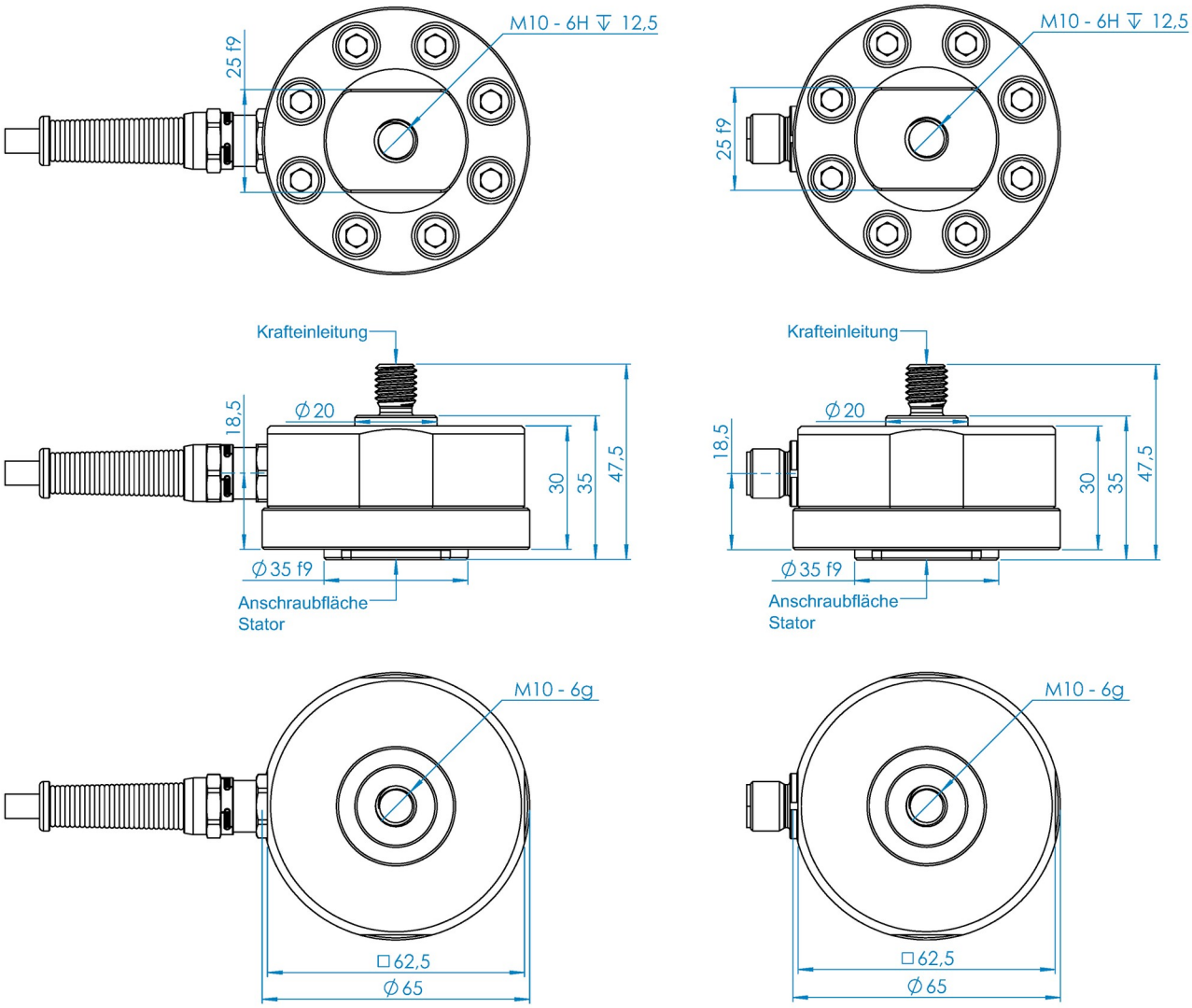

ME-Meßsysteme GmbH
Eduard-Maurer-Str. 9
DE-16761 Hennigsdorf

Tel: +49 (0)3302 8982 4 10
Mail: vertrieb@me-systeme.de
Web: www.me-systeme.de

Stand: 10.04.2026

Technical Data

Basic Data		Unit
Type	Kraftsensor	
Force direction	Tension/Compression	
Rated force Fx	5	kN
Force introduction	external thread	
Dimension 1	M10	
Sensor Fastening	Internal thread	
Dimension 2	M10	
Operating force	200	%
Rated displacement	0.05	mm
Lateral force limit	10	%
Material	Stainless steel	
Natural frequency fx	2	kHz
Dimensions	Ø65mm x 47,5mm	
Variants	2kN... 10kN	

Electrical Data		Unit
Input resistance	760	Ohm
Tolerance input resistance	60	Ohm
Output resistance	700	Ohm
Tolerance output resistance	10	Ohm
Insulation resistance	2	GOhm
Rated range of excitation voltage from	2.5	V
Rated range of excitation voltage to	5	V
Operating range of excitation voltage from	1	V
Operating range of excitation voltage to	10	V
Zero signal tolerance	0.05	mV/V
Rated output	1	mV/V

ME-Meßsysteme GmbH
Eduard-Maurer-Str. 9
DE-16761 Hennigsdorf

Tel: +49 (0)3302 8982 4 10
Mail: vertrieb@me-systeme.de
Web: www.me-systeme.de

Stand: 10.04.2026

Accuracy Data		Unit
Accuracy class	0,2	
Relative linearity error	0.1	%Fs
Relative zero signal hysteresis	0.05	%Fs
Temperature effect on zero signal	0.02	%Fs/K
Temperature effect on characteristic value	0.02	%Rd/K
Relative creep	0.1	%Fs
Environmental Data		**Unit**
Rated temperature range from	-10	°C
Rated temperature range to	70	°C
Operating temperature range from	-20	°C
Operating temperature range to	85	°C
Storage temperature range from	-10	°C
Storage temperature range to	70	°C
Environmental protection	IP67	

Abbreviation: RD: "Reading"; FS: "Full Scale";
The exact nominal sensitivity is indicated in the test report;

Pin Assignment

Channel	Symbol	Description	Wire color	PIN
	+Us	positive bridge supply	brown	1
	-Us	negative bridge supply	white	2
	+Ud	positive bridge output	blue	3
	-Ud	negative bridge output	black	4

Compressive load: positive output signal. Shield connected to sensor housing.

Mounting

The best possible accuracy and symmetry between compressive and tensile loads are achieved when the force is applied via the thread, or when the bearing surface is limited to an inner ring with a width of 1–4 mm. If the force is applied across 100% of the contact area, the characteristic value is reduced by approximately 5–10%.A ball washer, type C according to DIN 6319, can be used for optimal force application.

ME-Meßsysteme GmbH
Eduard-Maurer-Str. 9
DE-16761 Hennigsdorf

Tel: +49 (0)3302 8982 4 10
Mail: vertrieb@me-systeme.de
Web: www.me-systeme.de

Stand: 10.04.2026