# Force Sensor KM65z-IG 10kN

Item number: 13336

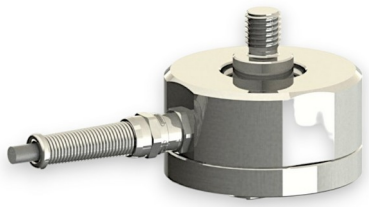

## Highlights

- low height of the sensor body
- drag chain compatible connection cable
- or integrated M12 round plug
- protection class IP67

The KM65z force sensor is a tension/compression force sensor in diaphragma construction. He is characterized by

- a low height for the sensor body,
- a central M10 external thread for force introduction for the 2 kN and 5 kN variants
- a central M12 external thread for force introduction for the 10 kN variants
- and 1x central M10 or M12 internal thread for attaching the sensor body.

All variants are available with a permanently installed connection cable, Lapp drag chain cable FD/CP/Plus, or with a permanently installed M12 round plug connector, 4-pin.

The protection class of the sensor is IP 67.

## Optional special version

- Protection class IP68: from rated force 200 N
- Temperature range: -40°C to 180°C
- Pressure range up to 8 bar
- Suitable for cleanrooms

ME-Meßsysteme GmbH
Eduard-Maurer-Str. 9
DE-16761 Hennigsdorf

Tel: +49 (0)3302 8982 4 10
Mail: vertrieb@me-systeme.de
Web: www.me-systeme.de

Stand: 20.03.2026

## Technical Drawing

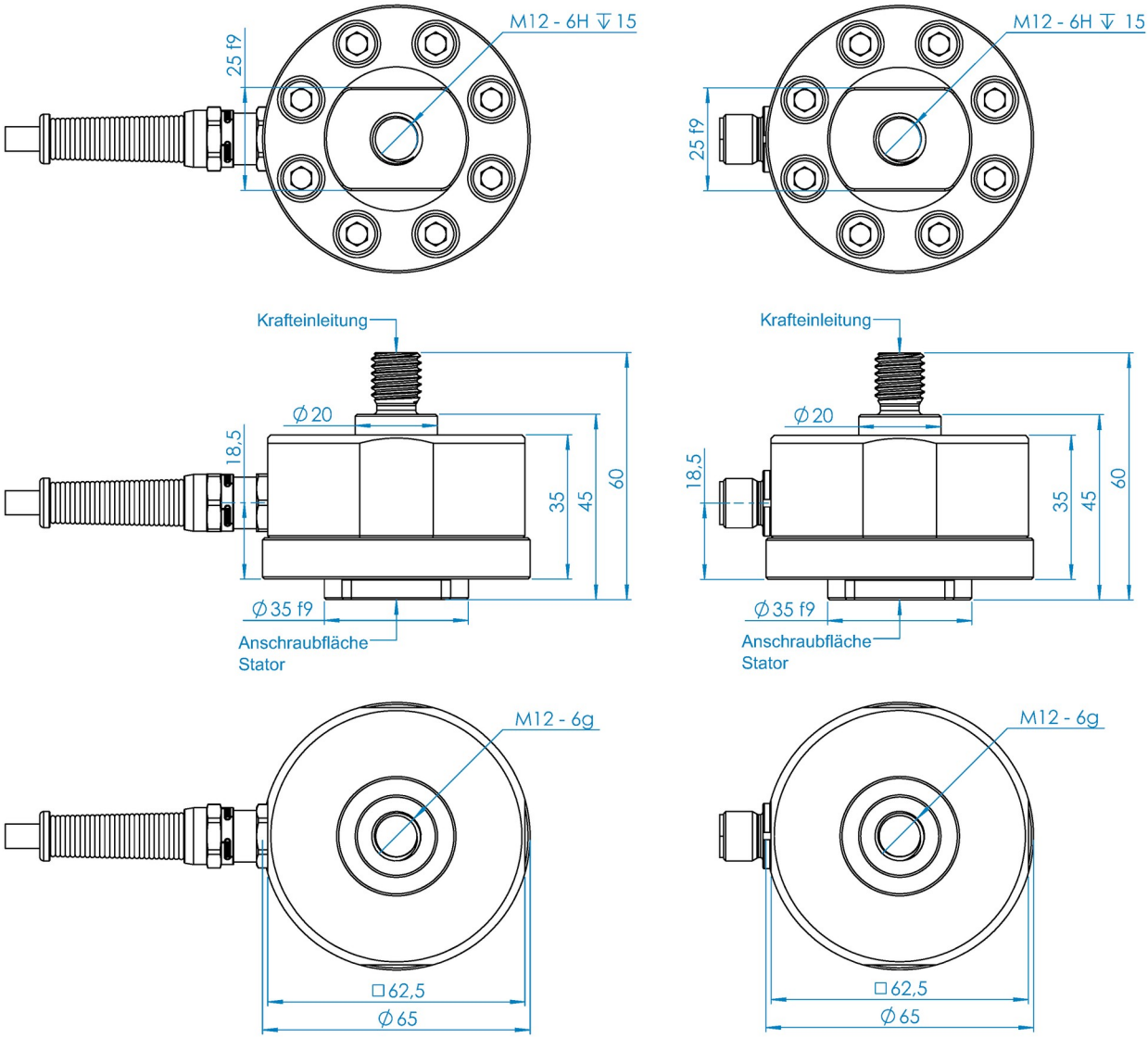


ME-Meßsysteme GmbH
Eduard-Maurer-Str. 9
DE-16761 Hennigsdorf

Tel: +49 (0)3302 8982 4 10
Mail: vertrieb@me-systeme.de
Web: www.me-systeme.de

Stand: 20.03.2026

## Technical Data

| Basic Data | | Unit |
|---|---|---|
| Type | Kraftsensor | |
| Force direction | Tension/Compression | |
| Rated force Fx | 10 | kN |
| Force introduction | external thread | |
| Dimension 1 | M12 | |
| Sensor Fastening | Internal thread | |
| Dimension 2 | M12 | |
| Operating force | 200 | % |
| Rated displacement | 0.05 | mm |
| Lateral force limit | 10 | % |
| Material | Stainless steel | |
| Natural frequency fx | 2 | kHz |
| Dimensions | Ø65mm x 60mm | |
| Variants | 2kN... 10kN | |

| Electrical Data | | Unit |
|---|---|---|
| Input resistance | 760 | Ohm |
| Tolerance input resistance | 60 | Ohm |
| Output resistance | 700 | Ohm |
| Tolerance output resistance | 10 | Ohm |
| Insulation resistance | 2 | GOhm |
| Rated range of excitation voltage from | 2.5 | V |
| Rated range of excitation voltage to | 5 | V |
| Operating range of excitation voltage from | 1 | V |
| Operating range of excitation voltage to | 10 | V |
| Zero signal tolerance | 0.05 | mV/V |
| Rated output | 1 | mV/V |

ME-Meßsysteme GmbH
Eduard-Maurer-Str. 9
DE-16761 Hennigsdorf

Tel: +49 (0)3302 8982 4 10
Mail: vertrieb@me-systeme.de
Web: www.me-systeme.de

Stand: 20.03.2026

| Accuracy Data | | Unit |
|---|---|---|
| Accuracy class | 0,2 | |
| Relative linearity error | 0.1 | %Fs |
| Relative zero signal hysteresis | 0.05 | %Fs |
| Temperature effect on zero signal | 0.02 | %Fs/K |
| Temperature effect on characteristic value | 0.02 | %Rd/K |
| Relative creep | 0.1 | %Fs |
| **Environmental Data** | | **Unit** |
| Rated temperature range from | -10 | °C |
| Rated temperature range to | 70 | °C |
| Operating temperature range from | -20 | °C |
| Operating temperature range to | 85 | °C |
| Storage temperature range from | -10 | °C |
| Storage temperature range to | 70 | °C |
| Environmental protection | IP67 | |

Abbreviation: RD: "Reading"; FS: "Full Scale";
The exact nominal sensitivity is indicated in the test report;

## Pin Assignment

| Channel | Symbol | Description | Wire color | PIN |
|---|---|---|---|---|
| | +Us | positive bridge supply | brown | |
| | -Us | negative bridge supply | white | |
| | +Ud | positive bridge output | green | |
| | -Ud | negative bridge output | yellow | |

Compressive load: positive output signal. Shield: transparent.

## Mounting

The best possible accuracy and symmetry between compressive and tensile loads are achieved when the force is applied via the thread, or when the bearing surface is limited to an inner ring with a width of 1–4 mm. If the force is applied across 100% of the contact area, the characteristic value is reduced by approximately 5–10%.A ball washer, type C according to DIN 6319, can be used for optimal force application.

ME-Meßsysteme GmbH
Eduard-Maurer-Str. 9
DE-16761 Hennigsdorf

Tel: +49 (0)3302 8982 4 10
Mail: vertrieb@me-systeme.de
Web: www.me-systeme.de

Stand: 20.03.2026