Force Sensor KM55 10kN

Item number: 10428



The force sensor KM55 is exceptionally suitable for measuring preload of bolts on account of its flat construction and its through hole.

But the internal bore 12 mm is also suitable for introduction of a force transmission. With a spherical cap the force transmission can be centered and made free of lateral force .

Through the introduction of half liners or prisms these force sensors can be adapted to the measurement of rolling forces.

The six Ø4,3mm thread holes on the bottom side permit the attachment of the sensor or the fitting of a prism.

Optional special version

- Protection class IP68: from rated force 200 N
- Vacuum version > 10^{-5} mbar
- Pressure range up to 8 bar
- Suitable for cleanrooms

ME-Meßsysteme GmbH
Eduard-Maurer-Str. 9
DE-16761 Hennigsdorf

Tel: +49 (0)3302 8982 4 10
Mail: vertrieb@me-systeme.de
Web: www.me-systeme.de

Stand: 20.03.2026

Technical Drawing

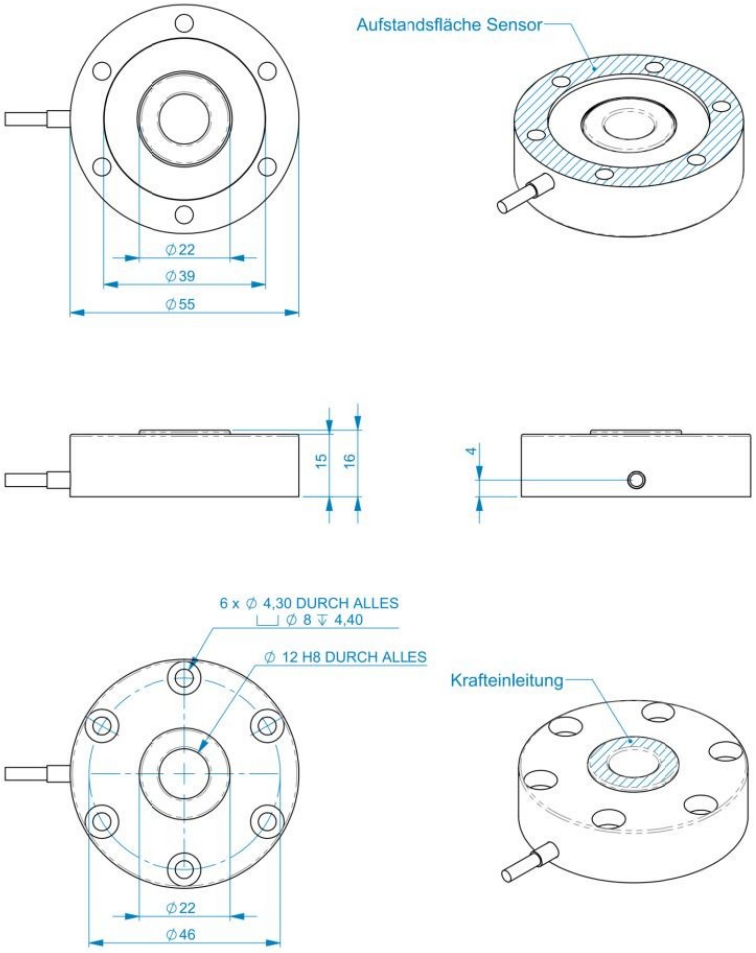

ME-Meßsysteme GmbH
Eduard-Maurer-Str. 9
DE-16761 Hennigsdorf

Tel: +49 (0)3302 8982 4 10
Mail: vertrieb@me-systeme.de
Web: www.me-systeme.de

Stand: 20.03.2026

Technical Data

Basic Data		Unit
Type	Force load cell	
Force direction	Compression	
Rated force Fx	10	kN
Force introduction	Through-hole	
Dimension 1	Ø12	
Sensor Fastening	Through-hole	
Dimension 2	6x Ø4,30	
Operating force	150	%FS
Rated displacement	0.07	mm
Lateral force limit	50	%FS
Material	Stainless steel	
Natural frequency fx	5	kHz
Dimensions	Ø55 mm x 16 mm	
Height	16	mm
Length or Diameter	55	mm
Variants	10kN... 50kN	

ME-Meßsysteme GmbH
Eduard-Maurer-Str. 9
DE-16761 Hennigsdorf

Tel: +49 (0)3302 8982 4 10
Mail: vertrieb@me-systeme.de
Web: www.me-systeme.de

Stand: 20.03.2026

Electrical Data		Unit
Input resistance	780	Ohm
Tolerance input resistance	80	±
Output resistance	700	Ohm
Tolerance output resistance	10	Ohm
Insulation resistance	2	GOhm
Rated range of excitation voltage from	2.5	V
Rated range of excitation voltage to	5	V
Operating range of excitation voltage from	1	V
Operating range of excitation voltage to	10	V
Zero signal	0.05	mV/V
Rated output	1	mV/V / FS

Accuracy Data		Unit
Accuracy class	1	
Relative linearity error	0.5	%FS
Relative zero signal hysteresis	0.05	%FS
Temperature effect on zero signal	0.02	%FS/K
Temperature effect on characteristic value	0.02	%RD/K
Relative creep	0.1	%FS
Environmental Data		**Unit**
Rated temperature range from	-10	°C
Rated temperature range to	70	°C
Operating temperature range from	-10	°C
Operating temperature range to	85	°C
Storage temperature range from	-10	°C
Storage temperature range to	85	°C
Environmental protection	IP67	

Abbreviation: RD: „Reading“; FS: „Full Scale“;1) The exact nominal sensitivity is indicated in the test report;

ME-Meßsysteme GmbH
Eduard-Maurer-Str. 9
DE-16761 Hennigsdorf

Tel: +49 (0)3302 8982 4 10
Mail: vertrieb@me-systeme.de
Web: www.me-systeme.de

Stand: 20.03.2026

Pin Assignment

Channel	Symbol	Description	Wire color	PIN
	+Us	positive bridge supply	brown	
	-Us	negative bridge supply	white	
	+Ud	positive bridge output	green	
	-Ud	negative bridge output	yellow	

Screen - transparent. Compressive load : positive output signal

ME-Meßsysteme GmbH
Eduard-Maurer-Str. 9
DE-16761 Hennigsdorf

Tel: +49 (0)3302 8982 4 10
Mail: vertrieb@me-systeme.de
Web: www.me-systeme.de

Stand: 20.03.2026