Force Sensor KM40e 5kN/4-20

Item number: 10716

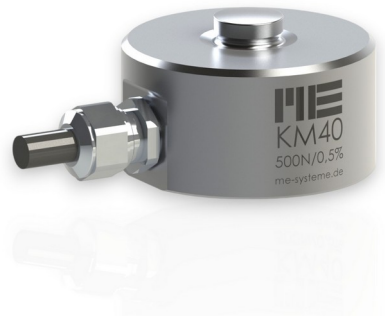

The force sensor KM40e is a precision force sensor in membrane construction with integrated miniature electronics for the measurement of compressive forces. The force sensor is fastened to a flat surface with four screws M4. There is a spherical cap with a radius of 50 mm provided for the force transmission. The force is applied with a flat plate against the cap. The strength introduction occurs with a flat plate against the cap. The hardness of the spherical cap is HRC 54. A flattening of the spherical cap from a load of about 20kN is therefore possible.

Environmental protection rating is IP 67.

In contrast to the force sensors of series KD, KDs and LC the lateral forces from about 5% of the nominal load can lead to a measurement error greater than 1%. Therefore, the force transmission must be centric.

The sensor with integrated analog amplifier GSV-13i is a compact measuring system.

The electronics amplifies the strain gauge output signal and allows a simple and direct analog measurement in voltage (0... 10V).

Further variants for voltage (0... 5V) or current (4... 20mA) are available on request.

Optional special version

- Protection class IP68: from rated force 200 N
- Pressure range up to 8 bar
- Suitable for cleanrooms

ME-Meßsysteme GmbH
Eduard-Maurer-Str. 9
DE-16761 Hennigsdorf

Tel: +49 (0)3302 8982 4 10
Mail: vertrieb@me-systeme.de
Web: www.me-systeme.de

Stand: 24.03.2026

Technical Drawing

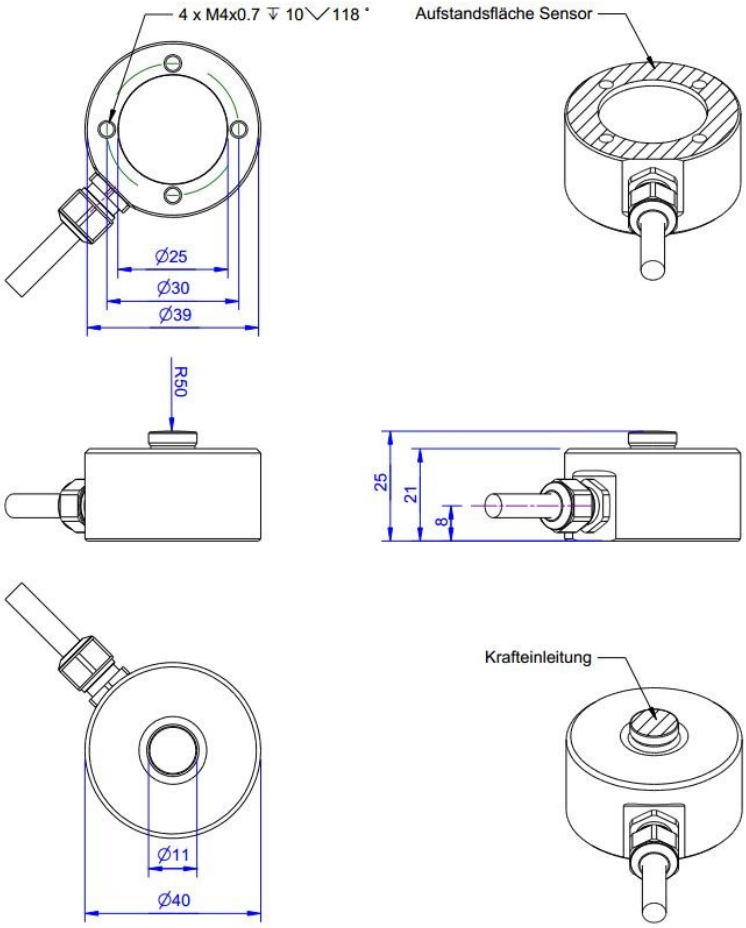

ME-Meßsysteme GmbH
Eduard-Maurer-Str. 9
DE-16761 Hennigsdorf

Tel: +49 (0)3302 8982 4 10
Mail: vertrieb@me-systeme.de
Web: www.me-systeme.de

Stand: 24.03.2026

Technical Data

Basic Data		Unit
Type	Force load cell	
Force direction	Compression	
Rated force Fx	5	kN
Force introduction	Load button	
Dimension 1	Ø11x4	
Sensor Fastening	Circular ring	
Dimension 2	Ø40x7,5	
Operating force	150	%FS
Rated displacement	0.07	mm
Lateral force limit	50	%FS
Material	Stainless steel	
Natural frequency fx	5	kHz
Dimensions	Ø 40mm x 25mm	
Height	25	mm
Length or Diameter	40	mm
Variants	100N... 50kN	

Electrical Data		Unit
Input resistance	390	Ohm
Tolerance input resistance	40	±
Output resistance	350	Ohm
Tolerance output resistance	1	±
Insulation resistance	2x10^9	Ohm
Rated range of excitation voltage from	2.5	V
Rated range of excitation voltage to	5	V
Operating range of excitation voltage from	1	V
Operating range of excitation voltage to	10	V
Zero signal	0.05	mV/V

ME-Meßsysteme GmbH
Eduard-Maurer-Str. 9
DE-16761 Hennigsdorf

Tel: +49 (0)3302 8982 4 10
Mail: vertrieb@me-systeme.de
Web: www.me-systeme.de

Stand: 24.03.2026

Accuracy Data		Unit
Accuracy class	0,5	
Relative linearity error	0.1	%FS
Relative zero signal hysteresis	0.05	%FS
Temperature effect on zero signal	0.02	%FS/K
Temperature effect on characteristic value	0.02	%RD/K
Relative creep	0.1	%FS

Analog Output		Unit
Current output from	4	mA
Current output to	20	mA
Zero adjustment to	4	mA

Measuring Frequency		Unit
Limit frequency (analog)	1000	Hz

Supply		Unit
Supply voltage from	14	V
Supply voltage to	28	V

Environmental Data		Unit
Rated temperature range from	-10	°C
Rated temperature range to	70	°C
Operating temperature range from	-10	°C
Operating temperature range to	85	°C
Storage temperature range from	-10	°C
Storage temperature range to	85	°C
Environmental protection	IP67	

Abbreviation: RD: „Reading"; FS: „Full Scale";1) The exact nominal sensitivity is indicated in the test report;

ME-Meßsysteme GmbH
Eduard-Maurer-Str. 9
DE-16761 Hennigsdorf

Tel: +49 (0)3302 8982 4 10
Mail: vertrieb@me-systeme.de
Web: www.me-systeme.de

Stand: 24.03.2026

Pin Assignment

Channel	Symbol	Description	Wire color	PIN
	Ub	Supply voltage (depends on variant)	brown	
	GND	Ground power supply	white	
	Ua (Out)	Output signal 4... 20mA / 0... 10V / 0... 5V	green	
	Tara (Ta)	Control input for zero balance	yellow	
	Scale (Sc)	Control input for amplification factor	grey	
		Shield	transparent	

ME-Meßsysteme GmbH
Eduard-Maurer-Str. 9
DE-16761 Hennigsdorf

Tel: +49 (0)3302 8982 4 10
Mail: vertrieb@me-systeme.de
Web: www.me-systeme.de

Stand: 24.03.2026