# Force Sensor KM26z 100N

Item number: 3145




The load cell KM26z is a membrane-type force sensor with small dimensions.It is suitable for measuring compressive and tensile forces. For force transmission thereexist two threads M6. Environmental protection rating is IP 67.Force transmission must be free of lateral forces.

## Optional special version

- Protection class IP68: from rated force 200 N
- Suitable for cleanrooms

ME-Meßsysteme GmbH
Eduard-Maurer-Str. 9
DE-16761 Hennigsdorf

Tel: +49 (0)3302 8982 4 10
Mail: vertrieb@me-systeme.de
Web: www.me-systeme.de

Stand: 31.03.2026

## Technical Drawing

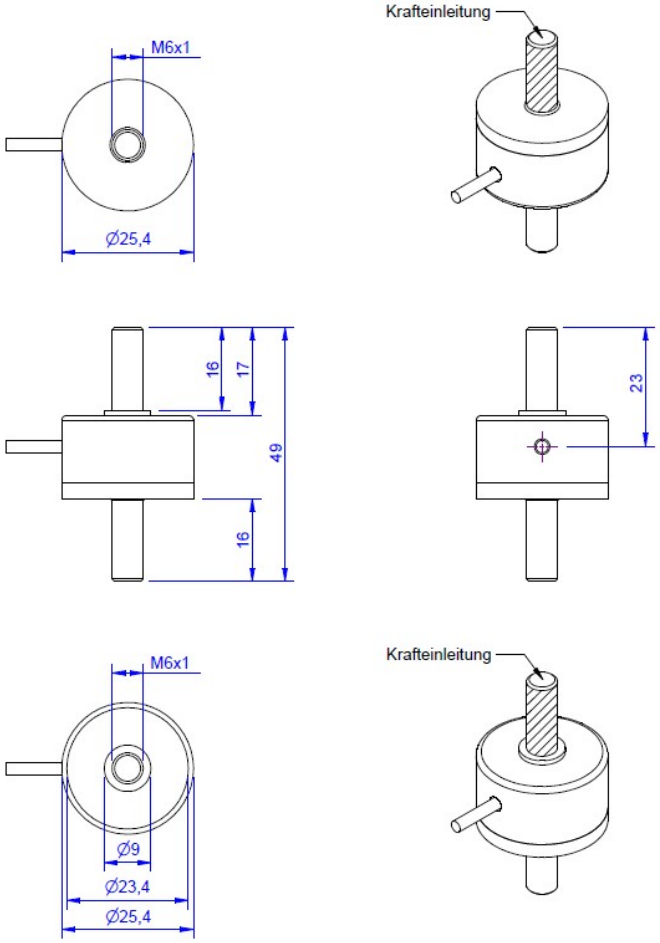


ME-Meßsysteme GmbH
Eduard-Maurer-Str. 9
DE-16761 Hennigsdorf

Tel: +49 (0)3302 8982 4 10
Mail: vertrieb@me-systeme.de
Web: www.me-systeme.de

Stand: 31.03.2026

## Technical Data

| Basic Data | | Unit |
|---|---|---|
| Type | Force load cell | |
| Force direction | Tension/Compression | |
| Rated force Fx | 100 | N |
| Force introduction | external thread | |
| Dimension 1 | M6x1 | |
| Sensor Fastening | external thread | |
| Dimension 2 | M6x1 | |
| Operating force | 150 | %FS |
| Rated displacement | 0.08 | mm |
| Lateral force limit | 10 | %FS |
| Material | Stainless steel | |
| Natural frequency fx | 5 | kHz |
| Dimensions | Ø25.4mm x 49mm | |
| Height | 49 | mm |
| Length or Diameter | 25.4 | mm |
| Torque limit | 5 | Nm |
| Bending moment limit | 1 | Nm |
| Variants | 20N... 5kN | |

ME-Meßsysteme GmbH
Eduard-Maurer-Str. 9
DE-16761 Hennigsdorf

Tel: +49 (0)3302 8982 4 10
Mail: vertrieb@me-systeme.de
Web: www.me-systeme.de

Stand: 31.03.2026

| Electrical Data | | Unit |
|---|---|---|
| Input resistance | 390 | Ohm |
| Tolerance input resistance | 40 | Ohm |
| Output resistance | 350 | Ohm |
| Insulation resistance | 2 | GOhm |
| Rated range of excitation voltage from | 2.5 | V |
| Rated range of excitation voltage to | 5 | V |
| Operating range of excitation voltage from | 1 | V |
| Operating range of excitation voltage to | 10 | V |
| Zero signal | 0.05 | mV/V |
| Rated output | 1 | mV/V / FS |

| Accuracy Data | | Unit |
|---|---|---|
| Accuracy class | 1 | |
| Relative linearity error | 0.5 | %FS |
| Relative zero signal hysteresis | 0.05 | %FS |
| Temperature effect on zero signal | 0.02 | %FS/K |
| Temperature effect on characteristic value | 0.02 | %RD/K |
| Relative creep | 0.1 | %FS |
| **Environmental Data** | | **Unit** |
| Rated temperature range from | -10 | °C |
| Rated temperature range to | 70 | °C |
| Operating temperature range from | -10 | °C |
| Operating temperature range to | 85 | °C |
| Storage temperature range from | -10 | °C |
| Storage temperature range to | 85 | °C |
| Environmental protection | IP67 | |

Abbreviation: RD: „Reading“; FS: „Full Scale“;1) The exact nominal sensitivity is indicated in the test report;till nominal output 50N: ca 0,5 ...1,0mV/V

ME-Meßsysteme GmbH
Eduard-Maurer-Str. 9
DE-16761 Hennigsdorf

Tel: +49 (0)3302 8982 4 10
Mail: vertrieb@me-systeme.de
Web: www.me-systeme.de

Stand: 31.03.2026

## Pin Assignment

| Channel | Symbol | Description | Wire color | PIN |
|---|---|---|---|---|
| | +Us | positive bridge supply | red | |
| | -Us | negative bridge supply | black | |
| | +Ud | positive bridge output | green | |
| | -Ud | negative bridge output | white | |

Pressure load: positive output signal.Shield- transparent.

## Mounting

Installation instructions: When assembling attachment parts, hold the sensor in place on the installation side / do not guide any tensioning torque through the sensor. Attachment parts may be supported on adjustable feet on the end faces, if preferred

# Installation

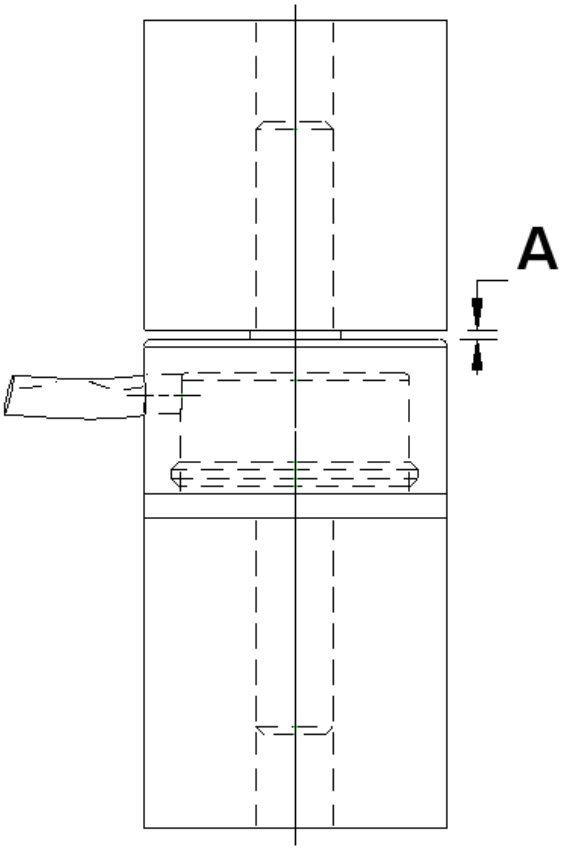


Gap "A" may not be closed, is necessary for the function of the force sensor.

ME-Meßsysteme GmbH
Eduard-Maurer-Str. 9
DE-16761 Hennigsdorf

Tel: +49 (0)3302 8982 4 10
Mail: vertrieb@me-systeme.de
Web: www.me-systeme.de

Stand: 31.03.2026