Force Sensor KM26z 500N

Item number: 2180



The load cell KM26z is a membrane-type force sensor with small dimensions.It is suitable for measuring compressive and tensile forces. For force transmission thereexist two threads M6. Environmental protection rating is IP 67.Force transmission must be free of lateral forces.

Optional special version

- Protection class IP68: from rated force 200 N
- Suitable for cleanrooms

ME-Meßsysteme GmbH
Eduard-Maurer-Str. 9
DE-16761 Hennigsdorf

Tel: +49 (0)3302 8982 4 10
Mail: vertrieb@me-systeme.de
Web: www.me-systeme.de

Stand: 14.04.2026

Technical Drawing

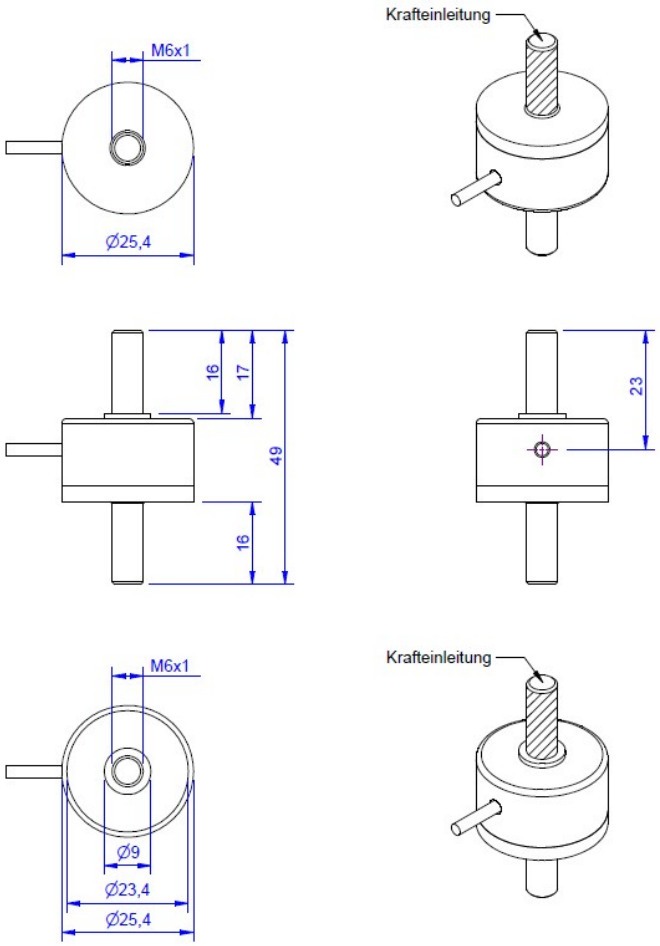

ME-Meßsysteme GmbH
Eduard-Maurer-Str. 9
DE-16761 Hennigsdorf

Tel: +49 (0)3302 8982 4 10
Mail: vertrieb@me-systeme.de
Web: www.me-systeme.de

Stand: 14.04.2026

Technical Data

Basic Data		Unit
Type	Force load cell	
Force direction	Tension/Compression	
Rated force Fx	500	N
Force introduction	external thread	
Dimension 1	M6x1	
Sensor Fastening	external thread	
Dimension 2	M6x1	
Operating force	150	%FS
Rated displacement	0.08	mm
Lateral force limit	10	%FS
Material	Stainless steel	
Natural frequency fx	5	kHz
Dimensions	Ø25.4mm x 49mm	
Height	49	mm
Length or Diameter	25.4	mm
Torque limit	10	Nm
Bending moment limit	2	Nm
Variants	20N... 5kN	

ME-Meßsysteme GmbH
Eduard-Maurer-Str. 9
DE-16761 Hennigsdorf

Tel: +49 (0)3302 8982 4 10
Mail: vertrieb@me-systeme.de
Web: www.me-systeme.de

Stand: 14.04.2026

Electrical Data		Unit
Input resistance	390	Ohm
Tolerance input resistance	40	Ohm
Output resistance	350	Ohm
Insulation resistance	2	GOhm
Rated range of excitation voltage from	2.5	V
Rated range of excitation voltage to	5	V
Operating range of excitation voltage from	1	V
Operating range of excitation voltage to	10	V
Zero signal	0.05	mV/V
Rated output	1	mV/V / FS

Accuracy Data		Unit
Accuracy class	1	
Relative linearity error	0.5	%FS
Relative zero signal hysteresis	0.05	%FS
Temperature effect on zero signal	0.02	%FS/K
Temperature effect on characteristic value	0.02	%RD/K
Relative creep	0.1	%FS
Environmental Data		**Unit**
Rated temperature range from	-10	°C
Rated temperature range to	70	°C
Operating temperature range from	-10	°C
Operating temperature range to	85	°C
Storage temperature range from	-10	°C
Storage temperature range to	85	°C
Environmental protection	IP67	

Abbreviation: RD: „Reading“; FS: „Full Scale“;1) The exact nominal sensitivity is indicated in the test report;till nominal output 50N: ca 0,5 ...1,0mV/V

ME-Meßsysteme GmbH
Eduard-Maurer-Str. 9
DE-16761 Hennigsdorf

Tel: +49 (0)3302 8982 4 10
Mail: vertrieb@me-systeme.de
Web: www.me-systeme.de

Stand: 14.04.2026

Pin Assignment

Channel	Symbol	Description	Wire color	PIN
	+Us	positive bridge supply	red	
	-Us	negative bridge supply	black	
	+Ud	positive bridge output	green	
	-Ud	negative bridge output	white	

Pressure load: positive output signal.Shield- transparent.

Mounting

Installation instructions: When assembling attachment parts, hold the sensor in place on the installation side / do not guide any tensioning torque through the sensor. Attachment parts may be supported on adjustable feet on the end faces, if preferred

Installation

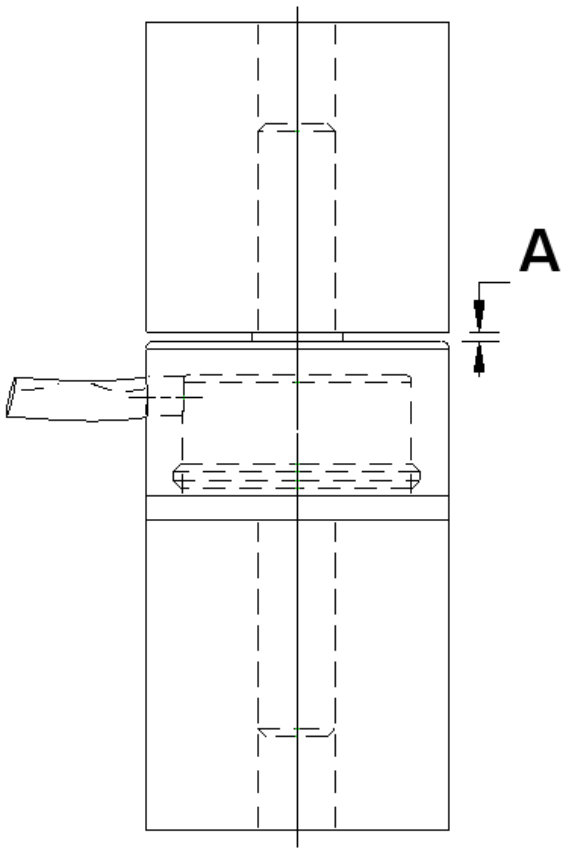

Gap "A" may not be closed, is necessary for the function of the force sensor.

ME-Meßsysteme GmbH
Eduard-Maurer-Str. 9
DE-16761 Hennigsdorf

Tel: +49 (0)3302 8982 4 10
Mail: vertrieb@me-systeme.de
Web: www.me-systeme.de

Stand: 14.04.2026