Force Sensor KM150z-IG 150kN

Item number: 13372

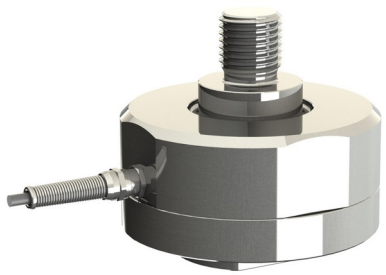

Highlights

- low height of the sensor body
- drag chain compatible connection cable
- or integrated M12 round plug

The KM150z-IG force sensor is a tension/compression force sensor in diaphragma construction. He is characterized by

- a low height for the sensor body,
- a central M36 external thread for force introduction for the 150 kN variant
- a central M42 external thread for force introduction for the 200 kN variant

All variants are available with a permanently installed connection cable, Lapp drag chain cable FD/CP/Plus, or with a permanently installed M12 round plug connector, 4-pin.

The protection class of the sensor is IP 67.

Optional special version

- Protection class IP68: from rated force 200 N
- Temperature range: -40°C to 180°C
- Pressure range up to 8 bar
- Suitable for cleanrooms

ME-Meßsysteme GmbH
Eduard-Maurer-Str. 9
DE-16761 Hennigsdorf

Tel: +49 (0)3302 8982 4 10
Mail: vertrieb@me-systeme.de
Web: www.me-systeme.de

Stand: 21.03.2026

Technical Drawing

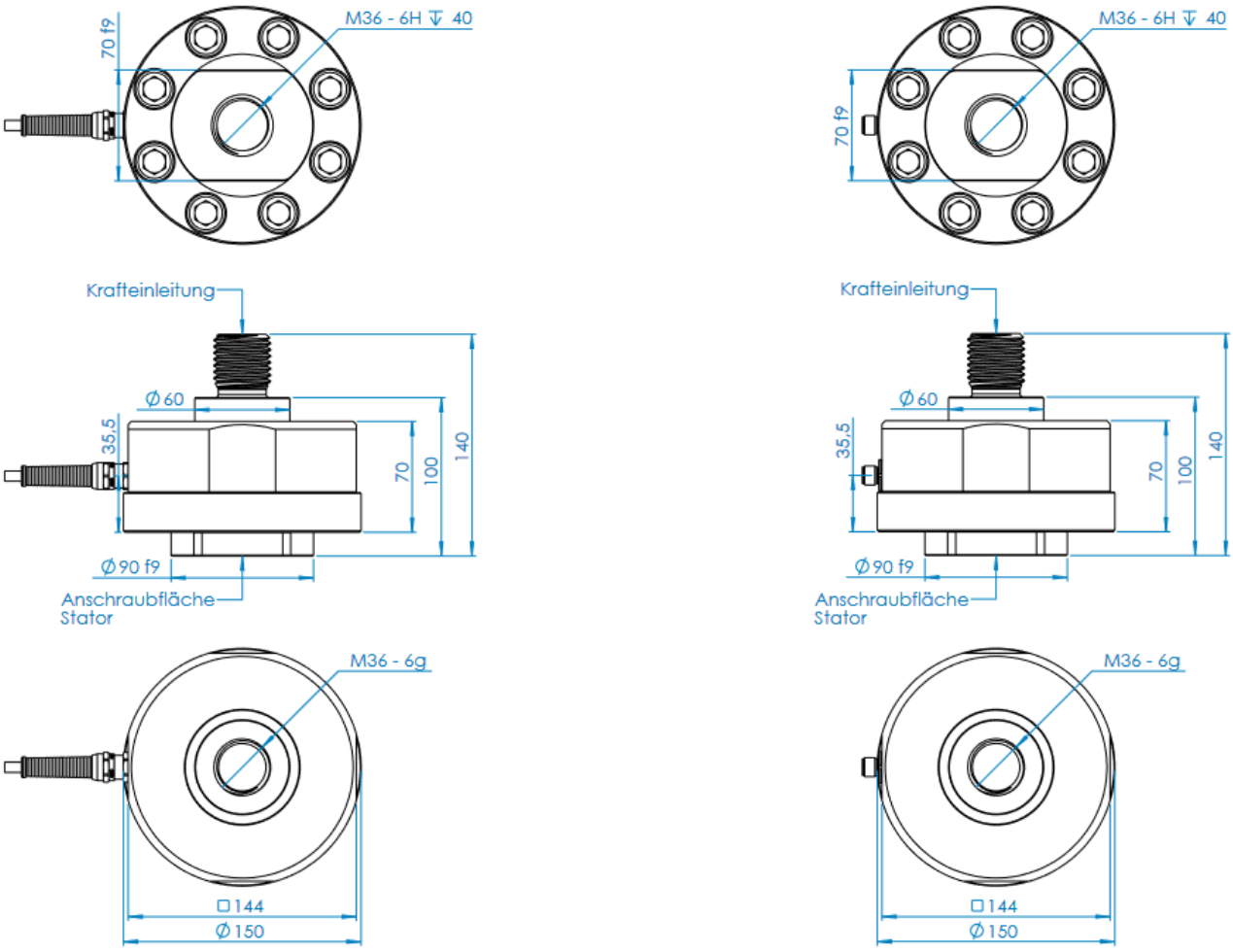

Technical Data

Basic Data		Unit
Type	Kraftsensor	
Force direction	Tension/Compression	
Rated force Fx	150	kN
Force introduction	external thread	
Dimension 1	M36	
Sensor Fastening	Internal thread	
Dimension 2	M36	
Operating force	200	%FS
Rated displacement	0.05	mm
Lateral force limit	10	%FS
Material	Stainless steel	
Natural frequency fx	2	kHz
Dimensions	Ø150 mm x 140 mm	
Variants	150kN... 200kN	

Electrical Data		Unit
Input resistance	760	Ohm
Tolerance input resistance	60	Ohm
Output resistance	700	Ohm
Tolerance output resistance	10	Ohm
Insulation resistance	2	GOhm
Rated range of excitation voltage from	2.5	V
Rated range of excitation voltage to	5	V
Operating range of excitation voltage from	1	V
Operating range of excitation voltage to	10	V
Zero signal tolerance	0.05	mV/V
Rated output	1	mV/V

ME-Meßsysteme GmbH
Eduard-Maurer-Str. 9
DE-16761 Hennigsdorf

Tel: +49 (0)3302 8982 4 10
Mail: vertrieb@me-systeme.de
Web: www.me-systeme.de

Stand: 21.03.2026

Accuracy Data		Unit
Accuracy class	0,2	
Relative linearity error	0.1	%Fs
Relative zero signal hysteresis	0.05	%Fs
Temperature effect on zero signal	0.02	%Fs/K
Temperature effect on characteristic value	0.02	%Rd/K
Relative creep	0.1	%Fs
Environmental Data		**Unit**
Rated temperature range from	-10	°C
Rated temperature range to	70	°C
Operating temperature range from	-20	°C
Operating temperature range to	85	°C
Storage temperature range from	-10	°C
Storage temperature range to	70	°C
Environmental protection	IP67	

Pin Assignment

Channel	Symbol	Description	Wire color	PIN
	+Us	positive bridge supply	brown	
	-Us	negative bridge supply	white	
	+Ud	positive bridge output	green	
	-Ud	negative bridge output	yellow	

Compressive load: positive output signal. Shield: transparent.

ME-Meßsysteme GmbH
Eduard-Maurer-Str. 9
DE-16761 Hennigsdorf

Tel: +49 (0)3302 8982 4 10
Mail: vertrieb@me-systeme.de
Web: www.me-systeme.de

Stand: 21.03.2026