Force Sensor KM12 5kN

Item number: 10080



The KM12 is an ultraminiature membrane force sensor.
The force is introduced via the calotte (diameter 3mm, R15) in the center of the sensor.
The force sensor is mounted on a flat surface. The centering of the force sensor takes place at the outside range, for example with 3 pens or by a 0.5mm deep flat reduction. The 9.8mm – 7.4mm ring forms the sensor's riot surface. In the center up to diameter 7.4mm, a casting mass is visible. The inner ring is not used for centering.
For heb-securing, the riot surface can be fixed with PUR varnish on a flat surface. Due to the small dimensions, a cable with an external diameter of only 1.4mm is used. The processing of the litts AWG36 requires special tools (scalpel, Hoffmann Abisolierer-AWG36-26). The polyurethane coat is intended exclusively for fixed installation, not for mobile use.
Alternatively, a version with a central cable finish is available (cable type: MESC-4x0014, PUR coat)

Optional special version

- Protection class IP68: from rated force 200 N
- Vacuum version > 10^{-5} mbar
- Pressure range up to 8 bar
- Suitable for cleanrooms

ME-Meßsysteme GmbH
Eduard-Maurer-Str. 9
DE-16761 Hennigsdorf

Tel: +49 (0)3302 8982 4 10
Mail: vertrieb@me-systeme.de
Web: www.me-systeme.de

Stand: 08.04.2026

Technical Drawing

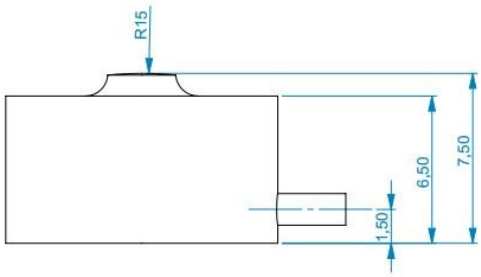

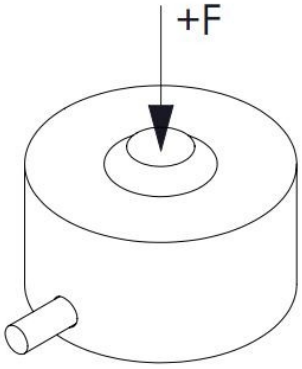

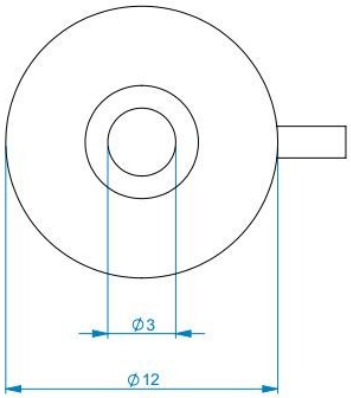

Nennlast: 5kN @ 1mV/V
3m Anschlusskabel, Enden offen

ME-Meßsysteme GmbH
Eduard-Maurer-Str. 9
DE-16761 Hennigsdorf

Tel: +49 (0)3302 8982 4 10
Mail: vertrieb@me-systeme.de
Web: www.me-systeme.de

Stand: 08.04.2026

Technical Data

Basic Data		Unit
Type	Force load cell	
Force direction	Compression	
Rated force Fx	5	kN
Force introduction	Load button	
Dimension 1	R15, Ø3 mm	
Sensor Fastening	Circular ring	
Operating force	150	%FS
Rated displacement	0.08	mm
Lateral force limit	10	%FS
Material	Stainless steel	
Natural frequency fx	5	kHz
Dimensions	Ø12 mm x 7,5 mm	
Height	7.5	mm
Length or Diameter	12	mm
Variants	5kN	

ME-Meßsysteme GmbH
Eduard-Maurer-Str. 9
DE-16761 Hennigsdorf

Tel: +49 (0)3302 8982 4 10
Mail: vertrieb@me-systeme.de
Web: www.me-systeme.de

Stand: 08.04.2026

Electrical Data		Unit
Input resistance	350	Ohm
Tolerance input resistance	20	Ohm
Output resistance	350	Ohm
Tolerance output resistance	20	Ohm
Insulation resistance	2	GOhm
Rated range of excitation voltage from	2.5	V
Rated range of excitation voltage to	5	V
Operating range of excitation voltage from	1	V
Operating range of excitation voltage to	5	V
Zero signal from	-0.1	mV/V
Zero signal to	0.1	mV/V
Characteristic value range from	0.7	mV/V
Characteristic value range to	0.9	mV/V

Accuracy Data		Unit
Accuracy class	1	
Relative linearity error	0.5	%FS
Relative zero signal hysteresis	0.05	%FS
Temperature effect on zero signal	0.02	%FS/K
Temperature effect on characteristic value	0.02	%RD/K
Relative creep	0.1	%FS
Environmental Data		**Unit**
Rated temperature range from	-10	°C
Rated temperature range to	70	°C
Operating temperature range from	-10	°C
Operating temperature range to	85	°C
Storage temperature range from	-10	°C
Storage temperature range to	85	°C
Environmental protection	IP67	

ME-Meßsysteme GmbH
Eduard-Maurer-Str. 9
DE-16761 Hennigsdorf

Tel: +49 (0)3302 8982 4 10
Mail: vertrieb@me-systeme.de
Web: www.me-systeme.de

Stand: 08.04.2026

Abbreviation: RD: „Reading“; FS: „Full Scale“;1) The exact nominal sensitivity is indicated in the test report;

Pin Assignment

Channel	Symbol	Description	Wire color	PIN
	+Us	positive bridge supply	brown	
	-Us	negative bridge supply	white	
	+Ud	positive bridge output	green	
	-Ud	negative bridge output	yellow	

Screen - transparent. Compressive load : positive output signal

ME-Meßsysteme GmbH
Eduard-Maurer-Str. 9
DE-16761 Hennigsdorf

Tel: +49 (0)3302 8982 4 10
Mail: vertrieb@me-systeme.de
Web: www.me-systeme.de

Stand: 08.04.2026