# Force Sensor KM115e 200kN/4-20

Item number: 5052




The force sensor KM 115 is a membrane force sensor for measuring compressive forces. It is fastened to an even surface with four screws M12. A spherical cap with a radius of 160 mm is provided for the force transmission.

The force sensor KM115e is a membrane-type force sensor for measurement of compressive forces. The integrated electronic GSV-15L provides an output signal 0...10 Volt or 4...20mA proportional to the applied force on the constructional element. The electronic GSV-15L offers a digital input for automatic zero adjustment, a digital input for autoscale and a digital output as threshold switch.

Environmental protection is IP 67.

## Optional special version

- Protection class IP68: from rated force 200 N
- Pressure range up to 8 bar
- Suitable for cleanrooms

ME-Meßsysteme GmbH
Eduard-Maurer-Str. 9
DE-16761 Hennigsdorf

Tel: +49 (0)3302 8982 4 10
Mail: vertrieb@me-systeme.de
Web: www.me-systeme.de

Stand: 20.03.2026

## Technical Drawing

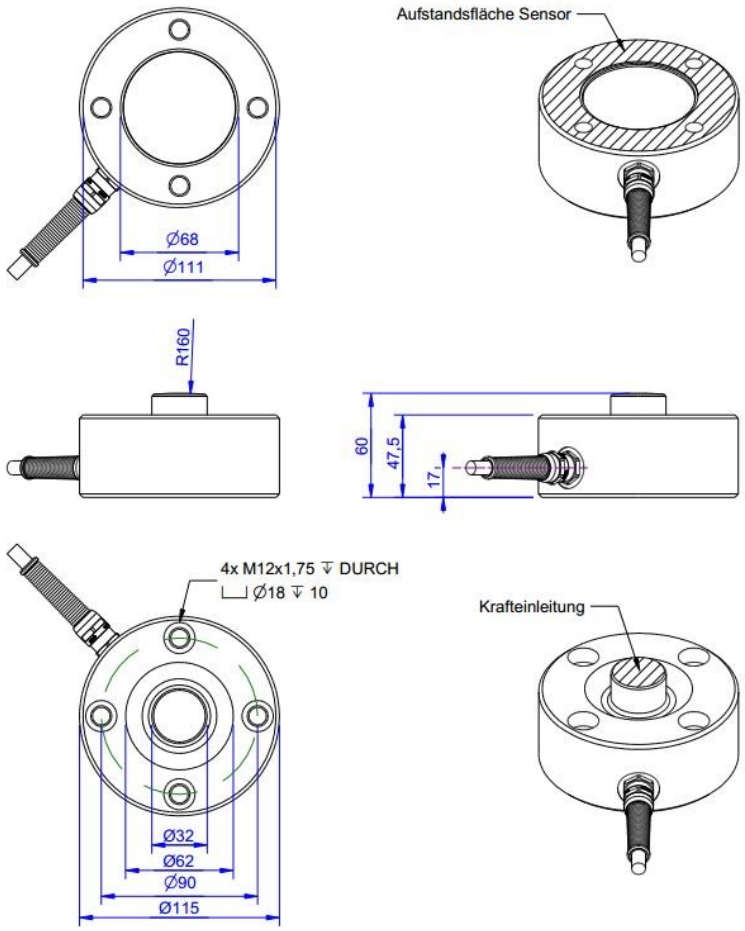


ME-Meßsysteme GmbH
Eduard-Maurer-Str. 9
DE-16761 Hennigsdorf

Tel: +49 (0)3302 8982 4 10
Mail: vertrieb@me-systeme.de
Web: www.me-systeme.de

Stand: 20.03.2026

## Technical Data

| Basic Data | | Unit |
|---|---|---|
| Type | Force load cell | |
| Force direction | Compression | |
| Rated force Fx | 200 | kN |
| Force introduction | Load button | |
| Dimension 1 | Ø32 | |
| Sensor Fastening | Circular ring | |
| Dimension 2 | Ø111x21,5 | |
| Operating force | 150 | %FS |
| Rated displacement | 0.08 | mm |
| Lateral force limit | 50 | %FS |
| Material | Stainless steel | |
| Dimensions | Ø115 mm x 60 mm | |
| Height | 60 | mm |
| Length or Diameter | 115 | mm |
| Variants | 50kN...200kN | |

| Electrical Data | Unit |
|---|---|

ME-Meßsysteme GmbH
Eduard-Maurer-Str. 9
DE-16761 Hennigsdorf

Tel: +49 (0)3302 8982 4 10
Mail: vertrieb@me-systeme.de
Web: www.me-systeme.de

Stand: 20.03.2026

| Accuracy Data | | Unit |
|---|---|---|
| Accuracy class | 0,5 | |
| Relative linearity error | 0.1 | %FS |
| Relative zero signal hysteresis | 0.05 | %FS |
| Temperature effect on zero signal | 0.02 | %FS/K |
| Temperature effect on characteristic value | 0.02 | %RD/K |
| Relative creep | 0.1 | %FS |

| Analog Output | | Unit |
|---|---|---|
| Current output from | 4 | mA |
| Current output to | 20 | mA |
| Zero adjustment to | 0 | mA |

| Supply | | Unit |
|---|---|---|
| Supply voltage from | 14 | V |
| Supply voltage to | 30 | V |

| Environmental Data | | Unit |
|---|---|---|
| Rated temperature range from | -10 | °C |
| Rated temperature range to | 70 | °C |
| Operating temperature range from | -10 | °C |
| Operating temperature range to | 85 | °C |
| Storage temperature range from | -10 | °C |
| Storage temperature range to | 85 | °C |
| Environmental protection | IP67 | |

Abbreviation: RD: „Reading“; FS: „Full Scale“;1) The exact nominal sensitivity is indicated in the test report;

ME-Meßsysteme GmbH
Eduard-Maurer-Str. 9
DE-16761 Hennigsdorf

Tel: +49 (0)3302 8982 4 10
Mail: vertrieb@me-systeme.de
Web: www.me-systeme.de

Stand: 20.03.2026

## Pin Assignment

| Channel | Symbol | Description | Wire color | PIN |
|---|---|---|---|---|
| | Ub | Supply voltage (depends on variant) | brown | |
| | GND | Ground power supply | white | |
| | Ua (Out) | Output signal 4... 20mA / 0... 10V / 0... 5V | green | |
| | Tara (Ta) | Control input for zero balance | yellow | |
| | Scale (Sc) | Control input for amplification factor | grey | |
| | GND | Ground, signal | pink | |
| | | Shield | transparent | |

ME-Meßsysteme GmbH
Eduard-Maurer-Str. 9
DE-16761 Hennigsdorf

Tel: +49 (0)3302 8982 4 10
Mail: vertrieb@me-systeme.de
Web: www.me-systeme.de

Stand: 20.03.2026