# Force Sensor KM10z 25N

Item number: 6822

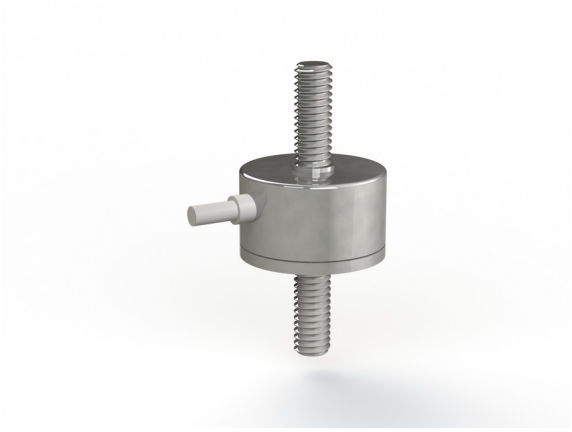

The KM10z membrane force sensor is ultra-miniature sensor for force and pressure measurement. The force is applied on two M2.5 thread. In the application of force is necessary to ensure that no bending moments greater than 0.1 Nm be initiated.

## Optional special version

- Protection class IP68: from rated force 200 N
- Suitable for cleanrooms

ME-Meßsysteme GmbH
Eduard-Maurer-Str. 9
DE-16761 Hennigsdorf

Tel: +49 (0)3302 8982 4 10
Mail: vertrieb@me-systeme.de
Web: www.me-systeme.de

Stand: 20.03.2026

## Technical Drawing

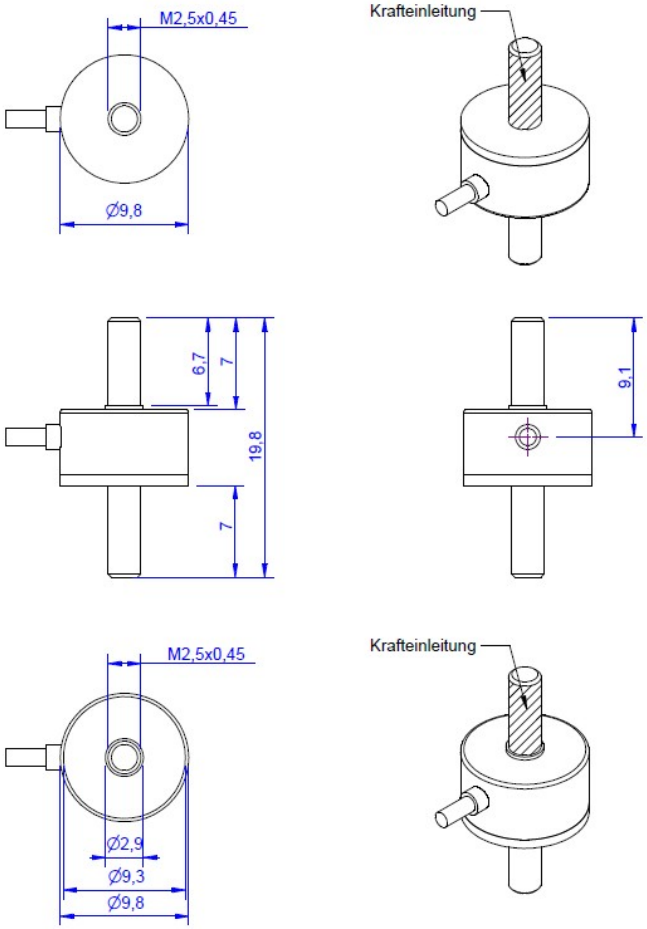


ME-Meßsysteme GmbH
Eduard-Maurer-Str. 9
DE-16761 Hennigsdorf

Tel: +49 (0)3302 8982 4 10
Mail: vertrieb@me-systeme.de
Web: www.me-systeme.de

Stand: 20.03.2026

## Technical Data

| Basic Data | | Unit |
|---|---|---|
| Type | Force load cell | |
| Force direction | Tension/Compression | |
| Rated force Fx | 25 | N |
| Force introduction | external thread | |
| Dimension 1 | M2,5x0,45 | |
| Sensor Fastening | external thread | |
| Dimension 2 | M2,5x0,45 | |
| Operating force | 150 | %FS |
| Rated displacement | 0.04 | mm |
| Lateral force limit | 10 | %FS |
| Material | Stainless steel | |
| Natural frequency fx | 5 | kHz |
| Dimensions | Ø10mm x 20mm | |
| Height | 19.8 | mm |
| Length or Diameter | 9.8 | mm |
| Mass | 12 | g |
| Torque limit | 5 | Nm |
| Bending moment limit | 0.2 | Nm |
| Variants | 25N... 200N | |

ME-Meßsysteme GmbH
Eduard-Maurer-Str. 9
DE-16761 Hennigsdorf

Tel: +49 (0)3302 8982 4 10
Mail: vertrieb@me-systeme.de
Web: www.me-systeme.de

Stand: 20.03.2026

| Electrical Data | | Unit |
|---|---|---|
| Input resistance | 390 | Ohm |
| Tolerance input resistance | 40 | ± |
| Output resistance | 350 | Ohm |
| Insulation resistance | 2x10^9 | Ohm |
| Rated range of excitation voltage from | 2.5 | V |
| Rated range of excitation voltage to | 5 | V |
| Operating range of excitation voltage from | 1 | V |
| Operating range of excitation voltage to | 5 | V |
| Zero signal | 0.05 | mV/V |
| Characteristic value range from | 0.25 | mV/V / FS |
| Characteristic value range to | 0.5 | mV/V / FS |

| Accuracy Data | | Unit |
|---|---|---|
| Accuracy class | 1 | |
| Relative linearity error | 0.1 | %FS |
| Relative zero signal hysteresis | 0.05 | %FS |
| Temperature effect on zero signal | 0.02 | %FS/K |
| Temperature effect on characteristic value | 0.02 | %RD/K |
| Relative creep | 0.1 | %FS |
| **Environmental Data** | | **Unit** |
| Rated temperature range from | -10 | °C |
| Rated temperature range to | 70 | °C |
| Operating temperature range from | -10 | °C |
| Operating temperature range to | 85 | °C |
| Storage temperature range from | -10 | °C |
| Storage temperature range to | 85 | °C |
| Environmental protection | IP67 | |

- Abbreviations: RD: Reading value; FS: Full Scale value;
- The exact nominal value is shown in the test report.
- Values in parentheses for alternating tensile-compressive loading

ME-Meßsysteme GmbH
Eduard-Maurer-Str. 9
DE-16761 Hennigsdorf

Tel: +49 (0)3302 8982 4 10
Mail: vertrieb@me-systeme.de
Web: www.me-systeme.de

Stand: 20.03.2026

- Mass including connecting cable

## Pin Assignment

| Channel | Symbol | Description | Wire color | PIN |
|---|---|---|---|---|
| | +Us | positive bridge supply | brown | |
| | -Us | negative bridge supply | white | |
| | +Ud | positive bridge output | green | |
| | -Ud | negative bridge output | yellow | |

Screen - transparent. Pressure load : positive output signal

## Mounting

Installation instructions: When assembling attachment parts, hold the sensor in place on the installation side / do not guide any tensioning torque through the sensor. Attachment parts may be supported on adjustable feet on the end faces, if preferred

Note: We recommend that the sensor KM10z with rated load 500N to use only for pressure measurements! Thread the sensor only suitable for sensor mounting, not suitable for tension!

# Installation

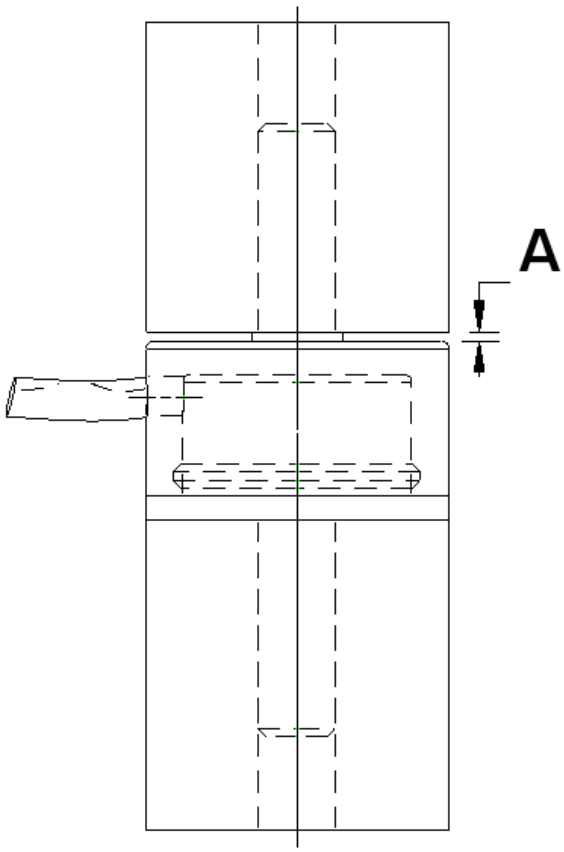


Gap "A" may not be closed, is necessary for the function of the force sensor.

ME-Meßsysteme GmbH
Eduard-Maurer-Str. 9
DE-16761 Hennigsdorf

Tel: +49 (0)3302 8982 4 10
Mail: vertrieb@me-systeme.de
Web: www.me-systeme.de

Stand: 20.03.2026