Force Sensor KM10z 200N

Item number: 7333

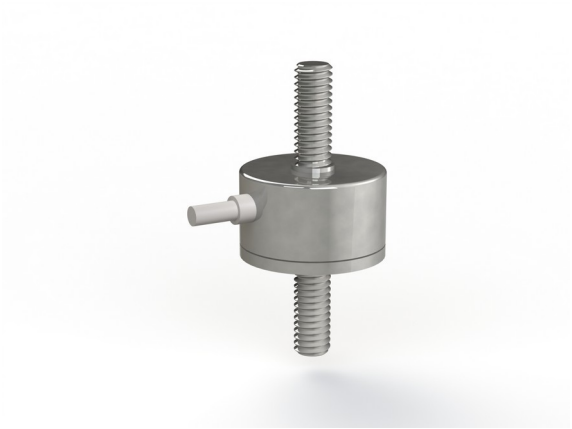

The KM10z membrane force sensor is ultra-miniature sensor for force and pressure measurement. The force is applied on two M2.5 thread. In the application of force is necessary to ensure that no bending moments greater than 0.1 Nm be initiated.

Optional special version

- Protection class IP68: from rated force 200 N
- Suitable for cleanrooms

ME-Meßsysteme GmbH
Eduard-Maurer-Str. 9
DE-16761 Hennigsdorf

Tel: +49 (0)3302 8982 4 10
Mail: vertrieb@me-systeme.de
Web: www.me-systeme.de

Stand: 20.03.2026

Technical Drawing

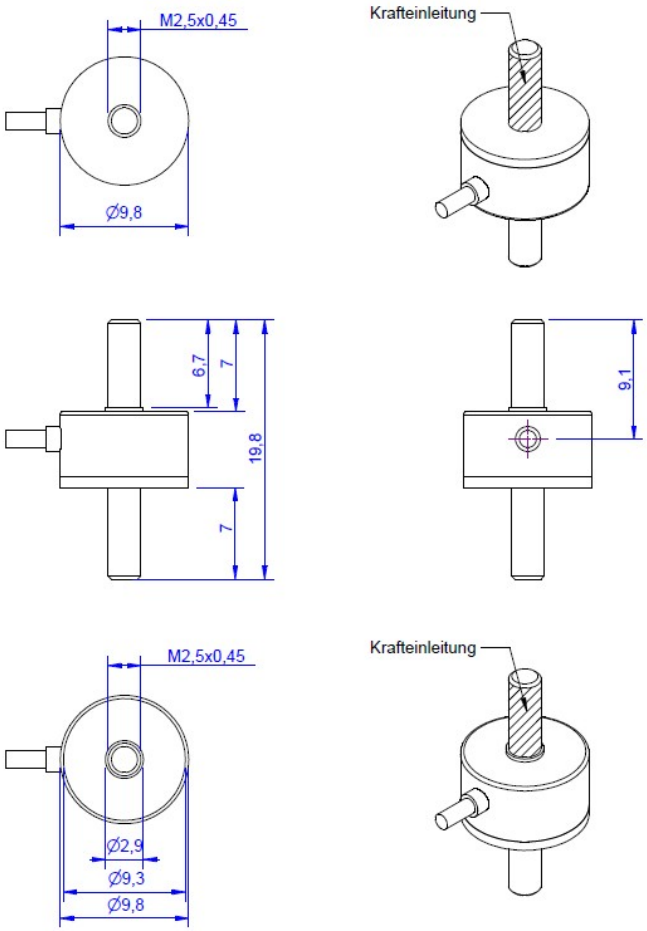

ME-Meßsysteme GmbH
Eduard-Maurer-Str. 9
DE-16761 Hennigsdorf

Tel: +49 (0)3302 8982 4 10
Mail: vertrieb@me-systeme.de
Web: www.me-systeme.de

Stand: 20.03.2026

Technical Data

Basic Data		Unit
Type	Force load cell	
Force direction	Tension/Compression	
Rated force Fx	200	N
Force introduction	external thread	
Dimension 1	M2,5x0,45	
Sensor Fastening	external thread	
Dimension 2	M2,5x0,45	
Operating force	150	%FS
Rated displacement	0.04	mm
Lateral force limit	10	%FS
Material	Stainless steel	
Natural frequency fx	5	kHz
Dimensions	Ø10mm x 20mm	
Height	19.8	mm
Length or Diameter	9.8	mm
Mass	12	g
Torque limit	5	Nm
Bending moment limit	0.2	Nm
Variants	25N... 200N	

ME-Meßsysteme GmbH
Eduard-Maurer-Str. 9
DE-16761 Hennigsdorf

Tel: +49 (0)3302 8982 4 10
Mail: vertrieb@me-systeme.de
Web: www.me-systeme.de

Stand: 20.03.2026

Electrical Data		Unit
Input resistance	390	Ohm
Tolerance input resistance	40	±
Output resistance	350	Ohm
Insulation resistance	2x10^9	Ohm
Rated range of excitation voltage from	2.5	V
Rated range of excitation voltage to	5	V
Operating range of excitation voltage from	1	V
Operating range of excitation voltage to	5	V
Zero signal	0.05	mV/V
Characteristic value range from	0.5	mV/V / FS
Characteristic value range to	1	mV/V / FS

Accuracy Data		Unit
Accuracy class	1	
Relative linearity error	0.1	%FS
Relative zero signal hysteresis	0.05	%FS
Temperature effect on zero signal	0.02	%FS/K
Temperature effect on characteristic value	0.02	%RD/K
Relative creep	0.1	%FS
Environmental Data		**Unit**
Rated temperature range from	-10	°C
Rated temperature range to	70	°C
Operating temperature range from	-10	°C
Operating temperature range to	85	°C
Storage temperature range from	-10	°C
Storage temperature range to	85	°C
Environmental protection	IP67	

- Abbreviations: RD: Reading value; FS: Full Scale value;
- The exact nominal value is shown in the test report.
- Values in parentheses for alternating tensile-compressive loading

ME-Meßsysteme GmbH
Eduard-Maurer-Str. 9
DE-16761 Hennigsdorf

Tel: +49 (0)3302 8982 4 10
Mail: vertrieb@me-systeme.de
Web: www.me-systeme.de

Stand: 20.03.2026

- Mass including connecting cable

Pin Assignment

Channel	Symbol	Description	Wire color	PIN
	+Us	positive bridge supply	brown	
	-Us	negative bridge supply	white	
	+Ud	positive bridge output	green	
	-Ud	negative bridge output	yellow	

Screen - transparent. Pressure load : positive output signal

Mounting

Installation instructions: When assembling attachment parts, hold the sensor in place on the installation side / do not guide any tensioning torque through the sensor. Attachment parts may be supported on adjustable feet on the end faces, if preferred

Note: We recommend that the sensor KM10z with rated load 500N to use only for pressure measurements! Thread the sensor only suitable for sensor mounting, not suitable for tension!

Installation

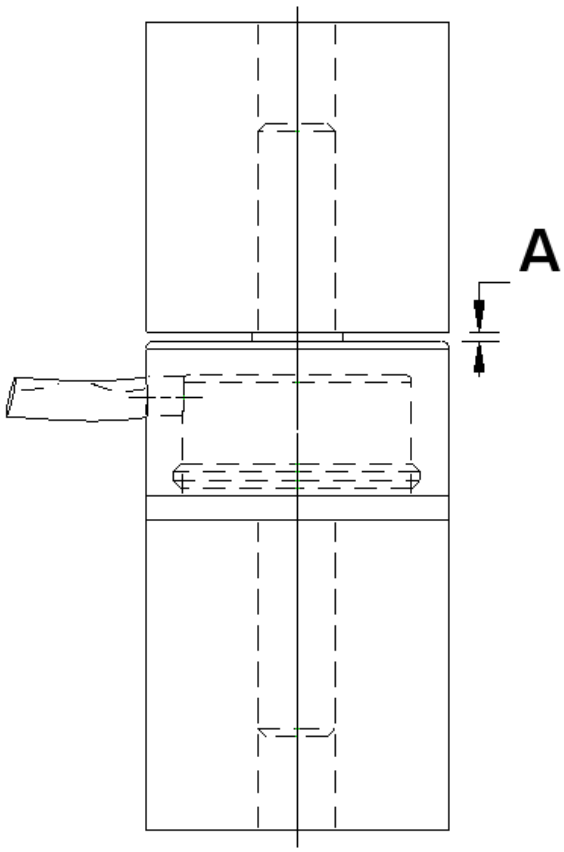

Gap "A" may not be closed, is necessary for the function of the force sensor.

ME-Meßsysteme GmbH
Eduard-Maurer-Str. 9
DE-16761 Hennigsdorf

Tel: +49 (0)3302 8982 4 10
Mail: vertrieb@me-systeme.de
Web: www.me-systeme.de

Stand: 20.03.2026