Force Sensor KL500 500kN

Item number: 5503



Tension load cell are ideal force sensors to measure large loads. Therefore, these are mainly used in cranes and other rope-operated lifting systems for measuring the tensile force. The load tabs have been specifically designed for use in harsh environmental conditions.

Applications:

-

Monitoring of rope forces

-

Calibration of force-measuring devices

Optional special version

- Protection class IP68: from rated force 200 N
- Pressure range up to 8 bar
- with integrated electronics 0 ... 10V, 4 ... 20mA

ME-Meßsysteme GmbH
Eduard-Maurer-Str. 9
DE-16761 Hennigsdorf

Tel: +49 (0)3302 8982 4 10
Mail: vertrieb@me-systeme.de
Web: www.me-systeme.de

Stand: 24.03.2026

Technical Drawing

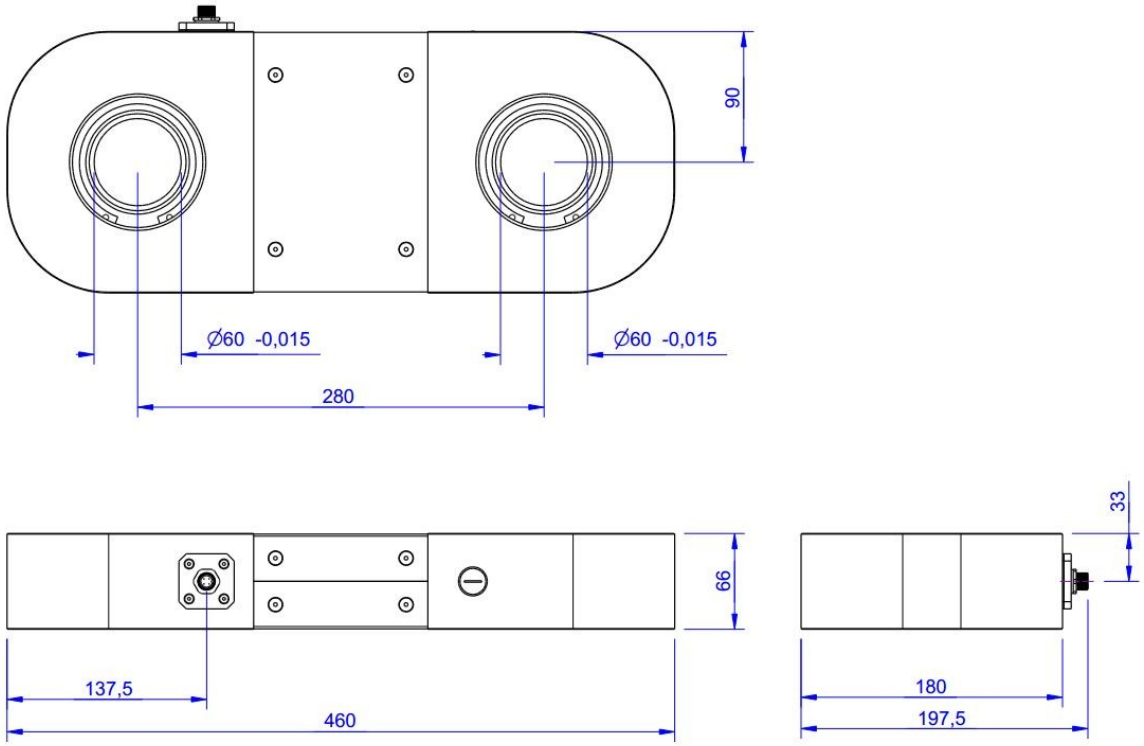

ME-Meßsysteme GmbH
Eduard-Maurer-Str. 9
DE-16761 Hennigsdorf

Tel: +49 (0)3302 8982 4 10
Mail: vertrieb@me-systeme.de
Web: www.me-systeme.de

Stand: 24.03.2026

Technical Data

Basic Data		Unit
Type	Kraftsensor	
Force direction	Tension/Compression	
Rated force Fx	500	kN
Force introduction	Zylinder	
Operating force	100	%FS
Material	tool steel	
Surface	Galvanisch verzinkt	
Dimensions	225mm x 85mm x 28mm ... 650mm x 240mm x 100mm	
Height	280	mm
Length or Diameter	460	mm
Variants	100kN... 1MN	

Electrical Data		Unit
Input resistance	700	Ohm
Tolerance input resistance	30	±
Output resistance	700	Ohm
Tolerance output resistance	30	±
Insulation resistance	2x10^9	Ohm
Rated range of excitation voltage from	2.5	V
Rated range of excitation voltage to	5	V
Operating range of excitation voltage from	1	V
Operating range of excitation voltage to	10	V
Zero signal	0.05	mV/V
Rated output	1	mV/V / FS

ME-Meßsysteme GmbH
Eduard-Maurer-Str. 9
DE-16761 Hennigsdorf

Tel: +49 (0)3302 8982 4 10
Mail: vertrieb@me-systeme.de
Web: www.me-systeme.de

Stand: 24.03.2026

Accuracy Data		Unit
Accuracy class	0,5	
Relative linearity error	0.1	%FS
Relative zero signal hysteresis	0.05	%FS
Temperature effect on zero signal	0.02	%FS/K
Temperature effect on characteristic value	0.02	%RD/K
Relative creep	0.1	%FS
Environmental Data		**Unit**
Rated temperature range from	-10	°C
Rated temperature range to	70	°C
Operating temperature range from	-10	°C
Operating temperature range to	85	°C
Storage temperature range from	-10	°C
Storage temperature range to	85	°C
Environmental protection	IP66	

Abbreviation: RD: „Reading“; FS: „Full Scale“;1) The exact nominal sensitivity is indicated in the test report;

Pin Assignment

Channel	Symbol	Description	Wire color	PIN
	+Us	positive bridge supply	brown	1
	-Us	negative bridge supply	white	2
	+Ud	positive bridge output	blue	3
	-Ud	negative bridge output	black	4

Pressure load: positive output signal.Shield- transparent.

ME-Meßsysteme GmbH
Eduard-Maurer-Str. 9
DE-16761 Hennigsdorf

Tel: +49 (0)3302 8982 4 10
Mail: vertrieb@me-systeme.de
Web: www.me-systeme.de

Stand: 24.03.2026