Force Sensor KD80se 200kN/420-12

Item number: 10702



The force sensor KD80se is used for tensile and compressive force measurements and for weighing.

Fields of application are e.g. Rope force measurements, test benches, overload protection for lifting equipment, process controls and scales.

The KD80se sensors have an integrated GSV-13q measuring amplifier with analogue output. The supply voltage is 14 ...28V DC Unlike the GSV-6L integratable measuring amplifier, the GSV-13q is not configurable via the ClickRClackR menu. The integrated measuring amplifier GSV-13q focuses on smallest dimensions, zero setting and scaling function. In contrast, filter functions and resolution with 600 nV/V ... 20 µV/V noise amplitude PkPk not suitable for high resolution applications. For high resolutions the use of an external measuring amplifier is recommended.

The KD80se sensors correspond to accuracy class 0.5. The protection class is IP65.

Optional special version

- Protection class IP68: from rated force 200 N
- Temperature range: -40°C to 180°C
- Vacuum version from 10^{-5} mbar
- Pressure range up to 8 bar
- Suitable for cleanrooms

ME-Meßsysteme GmbH
Eduard-Maurer-Str. 9
DE-16761 Hennigsdorf

Tel: +49 (0)3302 8982 4 10
Mail: vertrieb@me-systeme.de
Web: www.me-systeme.de

Stand: 19.03.2026

Technical Drawing

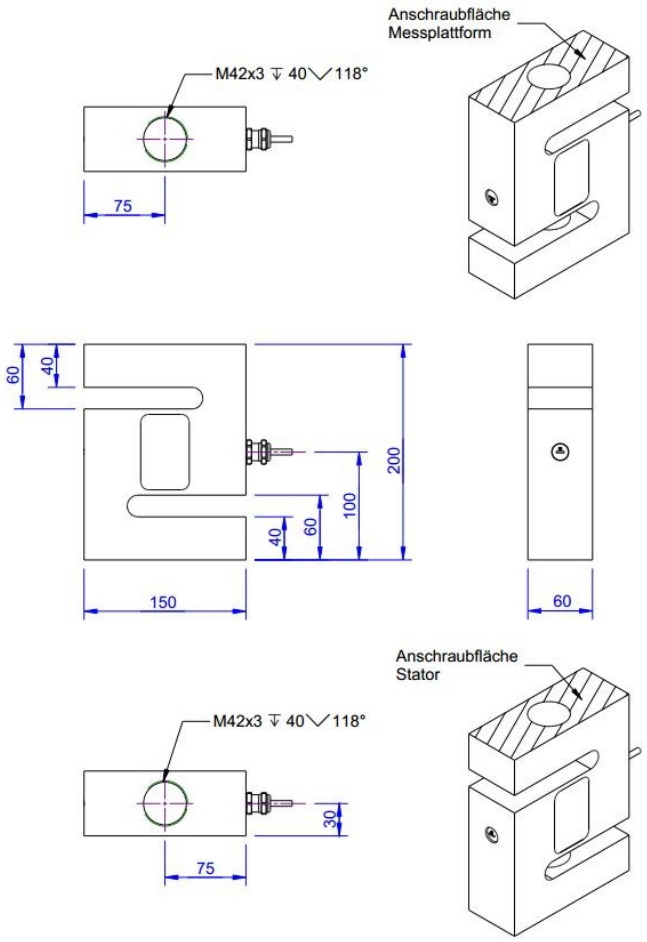

Technical Data

Basic Data		Unit
Type	Kraftsensor	
Force direction	Tension/Compression	
Rated force Fx	200	kN
Force introduction	Internal thread	
Dimension 1	M42x3	
Sensor Fastening	Internal thread	
Dimension 2	M42x3	
Operating force	150	%FS
Rated displacement	0.2	mm
Lateral force limit	100	%FS
Material	Stainless steel	
Natural frequency fx	5	kHz
Dimensions	60mm x 50mm x 10mm ... 200mm x 150mm x 60mm	
Height	200	mm
Length or Diameter	150	mm
Variants	100N... 200kN	

Electrical Data	Unit

ME-Meßsysteme GmbH
Eduard-Maurer-Str. 9
DE-16761 Hennigsdorf

Tel: +49 (0)3302 8982 4 10
Mail: vertrieb@me-systeme.de
Web: www.me-systeme.de

Stand: 19.03.2026

Accuracy Data		Unit
Accuracy class	0,5	
Relative linearity error	0.02	%FS
Relative zero signal hysteresis	0.02	%FS
Temperature effect on zero signal	0.02	%FS/K
Temperature effect on characteristic value	0.01	%RD/K
Relative creep	0.1	%FS

Analog Output		Unit
Current output from	4	mA
Current output to	20	mA
Zero adjustment to	12	mA

Measuring Frequency		Unit
Limit frequency (analog)	1000	Hz

Supply		Unit
Supply voltage from	14	V
Supply voltage to	28	V
Current consumption from	40	mA

Environmental Data		Unit
Rated temperature range from	-10	°C
Rated temperature range to	70	°C
Operating temperature range from	-10	°C
Operating temperature range to	85	°C
Storage temperature range from	-10	°C
Storage temperature range to	85	°C
Environmental protection	IP65	

Abbreviation: RD: „Reading“; FS: „Full Scale“;1) The exact nominal sensitivity is indicated in the test report;

ME-Meßsysteme GmbH
Eduard-Maurer-Str. 9
DE-16761 Hennigsdorf

Tel: +49 (0)3302 8982 4 10
Mail: vertrieb@me-systeme.de
Web: www.me-systeme.de

Stand: 19.03.2026

Pin Assignment

Channel	Symbol	Description	Wire color	PIN
	Ub	Supply voltage (depends on variant)	brown	
	GND	Ground power supply	white	
	Ua (Out)	Output signal 4... 20mA / 0... 10V / 0... 5V	green	
	Tara (Ta)	Control input for zero balance	yellow	
	Scale (Sc)	Control input for amplification factor	grey	
	GND	Ground, signal	pink	
		Shield	transparent	

ME-Meßsysteme GmbH
Eduard-Maurer-Str. 9
DE-16761 Hennigsdorf

Tel: +49 (0)3302 8982 4 10
Mail: vertrieb@me-systeme.de
Web: www.me-systeme.de

Stand: 19.03.2026