Force Sensor KD68 500N

Item number: 10684

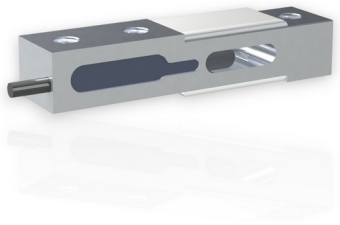

The force sensor KD68 has the geometry of a miniature load cell. It is fastened on one side using the threads M6.

The surfaces for mounting the sensor and for mounting the force introduction are offset by 1.5 mm so that the sensor can be mounted without additional spacers. Due to its very flat design, the sensor is also suitable for mounting between plates to build up a force measuring plate, for example to determine the center of pressure (COP).

There is a thread M6 for force transmission, which is displaced parallel under loading. The force sensor tolerates displacements of force transmission and lateral forces due to its design as a double-beam.

Optional special version

- Protection class IP68: from rated force 200 N
- Pressure range up to 8 bar
- Suitable for cleanrooms

ME-Meßsysteme GmbH
Eduard-Maurer-Str. 9
DE-16761 Hennigsdorf

Tel: +49 (0)3302 8982 4 10
Mail: vertrieb@me-systeme.de
Web: www.me-systeme.de

Stand: 20.03.2026

Technical Drawing

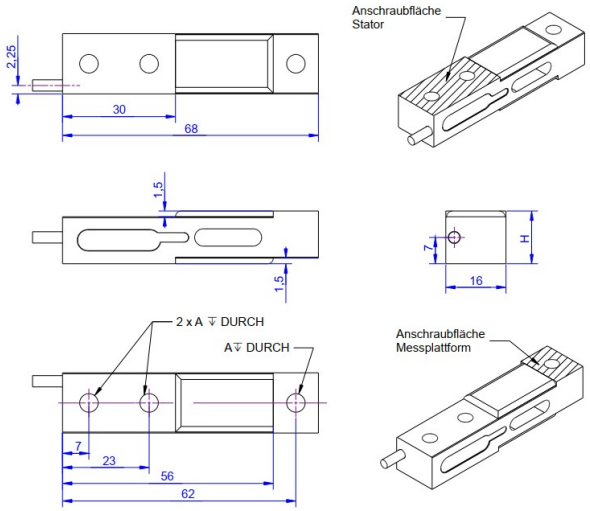

Nennlast	H in mm	A Gewindebohrung	Signal	Material
5N	10	M5x0.8	1 mV/V	3.4365
10N	10	M5x0.8	1 mV/V	3.4365
20N	10	M5x0.8	1 mV/V	3.4365
50N	10	M5x0.8	1 mV/V	3.4365
100 N	10	M5x0.8	1 mV/V	1.4542
200 N	10	M5x0.8	1 mV/V	1.4542
300 N	10	M5x0.8	1,29 mV/V	1.4542
500 N	12	M6x1	1 mV/V	1.4542
1000 N	14	M6x1	1 mV/V	1.4542

ME-Meßsysteme GmbH
Eduard-Maurer-Str. 9
DE-16761 Hennigsdorf

Tel: +49 (0)3302 8982 4 10
Mail: vertrieb@me-systeme.de
Web: www.me-systeme.de

Stand: 20.03.2026

Technical Data

Basic Data		Unit
Type	Kraftsensor	
Force direction	Tension/Compression	
Rated force Fx	500	N
Force introduction	Internal thread	
Dimension 1	1xM6x1	
Sensor Fastening	Internal thread	
Dimension 2	2xM6x1	
Operating force	400	%FS
Rated displacement	0.1	mm
Lateral force limit	200	%FS
Material	Stainless steel	
Natural frequency fx	4	kHz
Dimensions	68mm x 16mm x 14mm	
Variants	5n... 1kN	

Electrical Data		Unit
Input resistance	1200	Ohm
Tolerance input resistance	200	Ohm
Output resistance	1000	Ohm
Tolerance output resistance	3	Ohm
Insulation resistance	2	GOhm
Rated range of excitation voltage from	2.5	V
Rated range of excitation voltage to	5	V
Operating range of excitation voltage from	1	V
Operating range of excitation voltage to	10	V
Zero signal	0.05	mV/V
Rated output	1	mV/V
relative error of characteristic value	0.1	%FS

ME-Meßsysteme GmbH
Eduard-Maurer-Str. 9
DE-16761 Hennigsdorf

Tel: +49 (0)3302 8982 4 10
Mail: vertrieb@me-systeme.de
Web: www.me-systeme.de

Stand: 20.03.2026

Accuracy Data		Unit
Accuracy class	0,1	
Relative linearity error	0.02	%FS
Relative zero signal hysteresis	0.02	%FS
Temperature effect on zero signal	0.02	%FS/K
Temperature effect on characteristic value	0.01	%RD/K
Relative creep	0.1	%FS
Environmental Data		**Unit**
Rated temperature range from	-10	°C
Rated temperature range to	70	°C
Operating temperature range from	-10	°C
Operating temperature range to	85	°C
Storage temperature range from	-10	°C
Storage temperature range to	85	°C
Environmental protection	IP65	

Abbreviation: RD: „Reading“; FS: „Full Scale“;1) The exact characteristic value is indicated in the test report.

Pin Assignment

Channel	Symbol	Description	Wire color	PIN
	+Us	positive bridge supply	red	
	-Us	negative bridge supply	black	
	+Ud	positive bridge output	green	
	-Ud	negative bridge output	white	

Pressure load: positive output signal.Shield- transparent.

ME-Meßsysteme GmbH
Eduard-Maurer-Str. 9
DE-16761 Hennigsdorf

Tel: +49 (0)3302 8982 4 10
Mail: vertrieb@me-systeme.de
Web: www.me-systeme.de

Stand: 20.03.2026