Force Sensor KD60a 5N/IDC

Item number: 14753

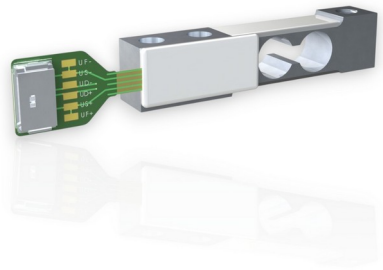

The KD60a force sensor is the successor to the KD60 force sensor. It also has the geometry of a miniature load cell and is attached on one side via the through holes. The force is introduced into the M5 thread. The force is introduced parallel when loaded. The force sensor tolerates displacements of the force introduction and transverse forces due to its double-beam design.

The special feature of this model is, among other things, the selectable connection option: thanks to the integrated circuit board, the appropriate connection can be selected. You can choose either the solder contacts for a direct cable connection or a small IDC connector for a suitable connection cable.

The KD60a force sensor can be used with an output signal of up to 2 mV/V or up to two times the specified nominal force.

An high-temperature version (HT) for a maximum operating temperature of 150°C is available on request. This sensor is suitable for test benches with high continuous loads.

Optional special version

- Protection class IP68: from rated force 200 N
- Pressure range up to 8 bar

ME-Meßsysteme GmbH
Eduard-Maurer-Str. 9
DE-16761 Hennigsdorf

Tel: +49 (0)3302 8982 4 10
Mail: vertrieb@me-systeme.de
Web: www.me-systeme.de

Stand: 20.03.2026

Technical Drawing

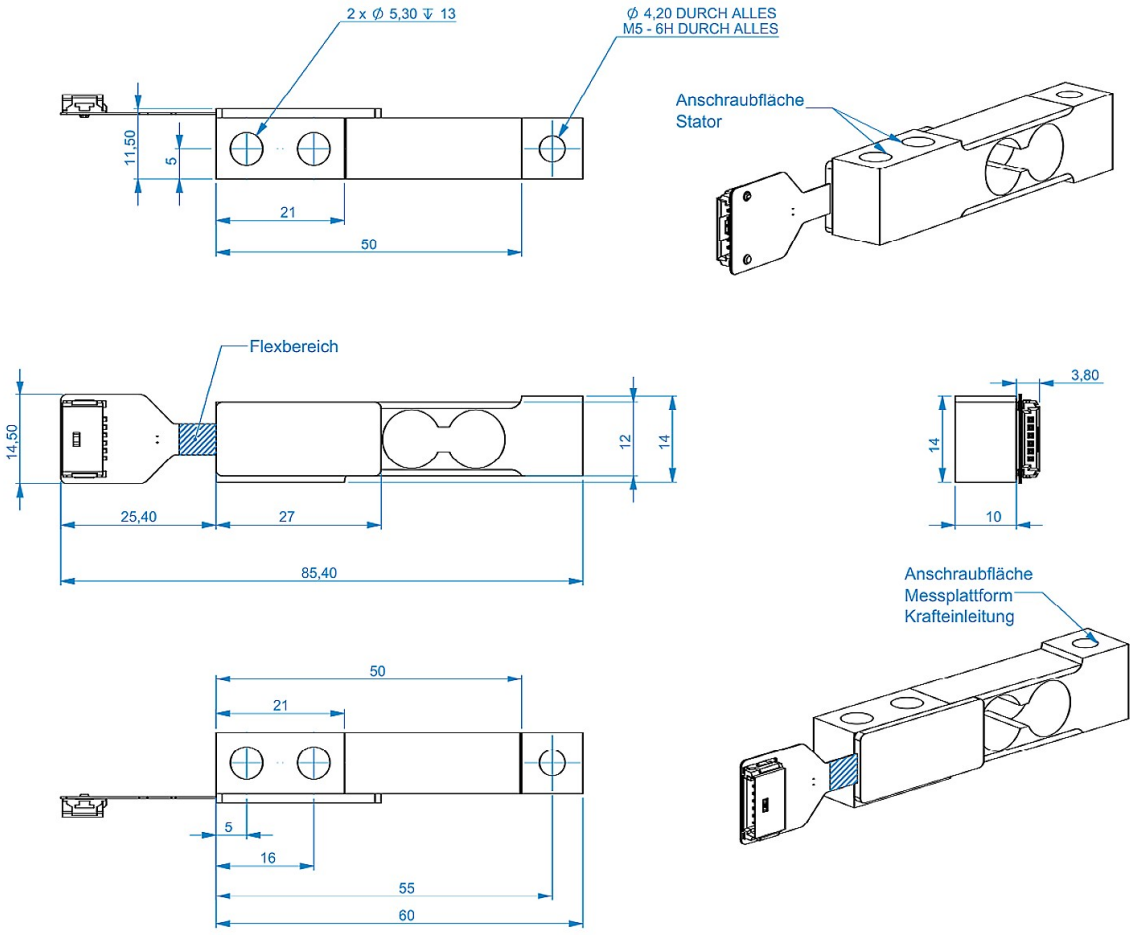

ME-Meßsysteme GmbH
Eduard-Maurer-Str. 9
DE-16761 Hennigsdorf

Tel: +49 (0)3302 8982 4 10
Mail: vertrieb@me-systeme.de
Web: www.me-systeme.de

Stand: 20.03.2026

Technical Data

Basic Data		Unit
Type	Kraftsensor	
Force direction	Tension/Compression	
Rated force Fx	5	N
Force introduction	Internal thread	
Dimension 1	1xM5x0,8	
Sensor Fastening	Through-hole	
Dimension 2	2xØ5,3	
Operating force	200	%FS
Rated displacement	0.1	mm
Lateral force limit	500	%FS
Material	Stainless steel	
Dimensions	60mm x 10mm x 14mm	
Height	14	mm
Length or Diameter	60	mm

ME-Meßsysteme GmbH
Eduard-Maurer-Str. 9
DE-16761 Hennigsdorf

Tel: +49 (0)3302 8982 4 10
Mail: vertrieb@me-systeme.de
Web: www.me-systeme.de

Stand: 20.03.2026

Electrical Data		Unit
Input resistance	400	Ohm
Tolerance input resistance	50	Ohm
Output resistance	350	Ohm
Tolerance output resistance	3	Ohm
Insulation resistance	2	GOhm
Rated range of excitation voltage from	2.5	V
Rated range of excitation voltage to	5	V
Operating range of excitation voltage from	1	V
Operating range of excitation voltage to	10	V
Zero signal	0.05	mV/V
Rated output	1	mV/V / FS
Characteristic value range from	0.75	mV/V / FS
Characteristic value range to	1.1	mV/V / FS

Accuracy Data		Unit
Relative linearity error	0.1	%FS
Relative zero signal hysteresis	0.1	%FS
Temperature effect on zero signal	0.2	%FS/K
Temperature effect on characteristic value	0.01	%RD/K
Relative creep	0.1	%FS
Environmental Data		**Unit**
Rated temperature range from	-10	°C
Rated temperature range to	70	°C
Operating temperature range from	-10	°C
Operating temperature range to	85	°C
Storage temperature range from	-10	°C

ME-Meßsysteme GmbH
Eduard-Maurer-Str. 9
DE-16761 Hennigsdorf

Tel: +49 (0)3302 8982 4 10
Mail: vertrieb@me-systeme.de
Web: www.me-systeme.de

Stand: 20.03.2026