Force Sensor KD60 20N/Flex90

Item number: 16924



The KD60 force sensor has the geometry of a miniature load cell. The force sensor is mounted on one side via the 5.3 mm diameter through holes. The force is introduced into the M5 thread. The force is displaced parallel under load. Due to its double-beam design, the force sensor tolerates displacements of the force introduction and transverse forces.

The KD60 force sensor is designed as a multi-range sensor. An accuracy of 0.1% is achieved at a nominal value of 0.5 mV/V. This means that the zero-point stability is four times tighter than a sensor with a nominal value of 2 mV/V. The KD60 force sensor can be used with an output signal of up to 2 mV/V, or up to four times the specified nominal force.

The KD60 sensor is made of aluminum for loads up to 100 N. The 200 N, 500 N, and 1 kN versions are made of stainless steel. The 10N to 100N versions are also available in stainless steel. The steel version is suitable for test benches with high continuous loads. The KD60a models are made entirely of stainless steel and are also available in a high-temperature version up to 150°C.

The new "KD60 Flex90" sensor is an improved version of the KD60 force sensor: The cable outlet with strain relief is robustly implemented with a flexible circuit board.

Optional special version

- Protection class IP68: from rated force 200 N
- Pressure range up to 8 bar

ME-Meßsysteme GmbH
Eduard-Maurer-Str. 9
DE-16761 Hennigsdorf

Tel: +49 (0)3302 8982 4 10
Mail: vertrieb@me-systeme.de
Web: www.me-systeme.de

Stand: 20.03.2026

Technical Drawing

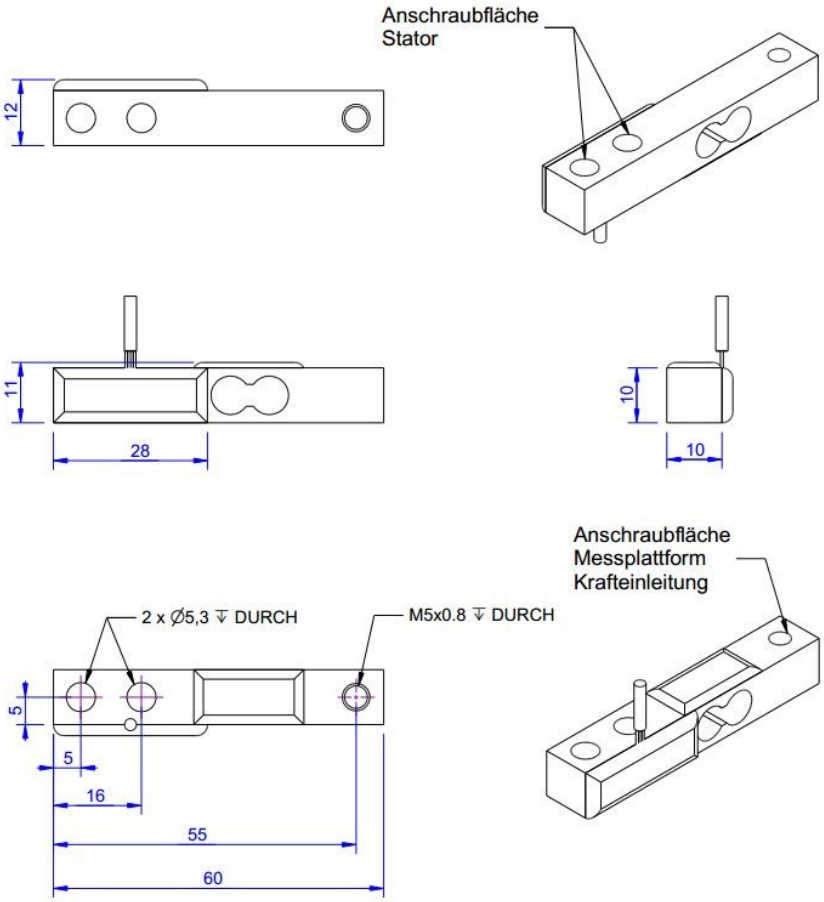

ME-Meßsysteme GmbH
Eduard-Maurer-Str. 9
DE-16761 Hennigsdorf

Tel: +49 (0)3302 8982 4 10
Mail: vertrieb@me-systeme.de
Web: www.me-systeme.de

Stand: 20.03.2026

Technical Data

Basic Data		Unit
Type	Kraftsensor	
Force direction	Tension/Compression	
Rated force Fx	20	N
Force introduction	Internal thread	
Dimension 1	1xM5x0,8	
Sensor Fastening	Through-hole	
Dimension 2	2xØ5,3	
Operating force	400	%FS
Rated displacement	0.1	mm
Lateral force limit	500	%FS
Material	alluminum-alloy	
Natural frequency fx	1200	Hz
Dimensions	60mm x 10mm x 10mm	
Height	10	mm
Length or Diameter	60	mm
Breaking force	700	%
Variants	5N... 1kN	

ME-Meßsysteme GmbH
Eduard-Maurer-Str. 9
DE-16761 Hennigsdorf

Tel: +49 (0)3302 8982 4 10
Mail: vertrieb@me-systeme.de
Web: www.me-systeme.de

Stand: 20.03.2026

Electrical Data		Unit
Input resistance	420	Ohm
Tolerance input resistance	30	Ohm
Output resistance	350	Ohm
Tolerance output resistance	3	Ohm
Insulation resistance	5x10^9	Ohm
Rated range of excitation voltage from	2.5	V
Rated range of excitation voltage to	5	V
Operating range of excitation voltage from	1	V
Operating range of excitation voltage to	10	V
Zero signal	0.05	mV/V
Rated output	0.5	mV/V / FS
relative error of characteristic value	0.1	%FS

Accuracy Data		Unit
Accuracy class	0,1	
Relative linearity error	0.1	%FS
Relative zero signal hysteresis	0.1	%FS
Temperature effect on zero signal	0.02	%FS/K
Temperature effect on characteristic value	0.01	%RD/K
Relative creep	0.1	%FS
Environmental Data		**Unit**
Rated temperature range from	-10	°C
Rated temperature range to	70	°C
Operating temperature range from	-10	°C
Operating temperature range to	85	°C
Storage temperature range from	-10	°C
Storage temperature range to	85	°C
Environmental protection	IP65	

Abbreviation: RD: „Reading“; FS: „Full Scale“;1) The exact characteristic value is indicated in the test report.

ME-Meßsysteme GmbH
Eduard-Maurer-Str. 9
DE-16761 Hennigsdorf

Tel: +49 (0)3302 8982 4 10
Mail: vertrieb@me-systeme.de
Web: www.me-systeme.de

Stand: 20.03.2026

Pin Assignment

Channel	Symbol	Description	Wire color	PIN
	+Us	positive bridge supply	red	
	-Us	negative bridge supply	black	
	+Ud	positive bridge output	green	
	-Ud	negative bridge output	white	

Pressure load: positive output signal.Shield- transparent.

ME-Meßsysteme GmbH
Eduard-Maurer-Str. 9
DE-16761 Hennigsdorf

Tel: +49 (0)3302 8982 4 10
Mail: vertrieb@me-systeme.de
Web: www.me-systeme.de

Stand: 20.03.2026