# Force Sensor KD60 200N/VA/Flex90

Item number: 16927



The KD60 force sensor has the geometry of a miniature load cell. The force sensor is mounted on one side via the 5.3 mm diameter through holes. The force is introduced into the M5 thread. The force is displaced parallel under load. Due to its double-beam design, the force sensor tolerates displacements of the force introduction and transverse forces.

The KD60 force sensor is designed as a multi-range sensor. An accuracy of 0.1% is achieved at a nominal value of 0.5 mV/V. This means that the zero-point stability is four times tighter than a sensor with a nominal value of 2 mV/V. The KD60 force sensor can be used with an output signal of up to 2 mV/V, or up to four times the specified nominal force.

The KD60 sensor is made of aluminum for loads up to 100 N. The 200 N, 500 N, and 1 kN versions are made of stainless steel. The 10N to 100N versions are also available in stainless steel. The steel version is suitable for test benches with high continuous loads. The KD60a models are made entirely of stainless steel and are also available in a high-temperature version up to 150°C.

The new "KD60 Flex90" sensor is an improved version of the KD60 force sensor: The cable outlet with strain relief is robustly implemented with a flexible circuit board.

## Optional special version

- Protection class IP68: from rated force 200 N
- Pressure range up to 8 bar

ME-Meßsysteme GmbH
Eduard-Maurer-Str. 9
DE-16761 Hennigsdorf

Tel: +49 (0)3302 8982 4 10
Mail: vertrieb@me-systeme.de
Web: www.me-systeme.de

Stand: 20.03.2026

## Technical Drawing

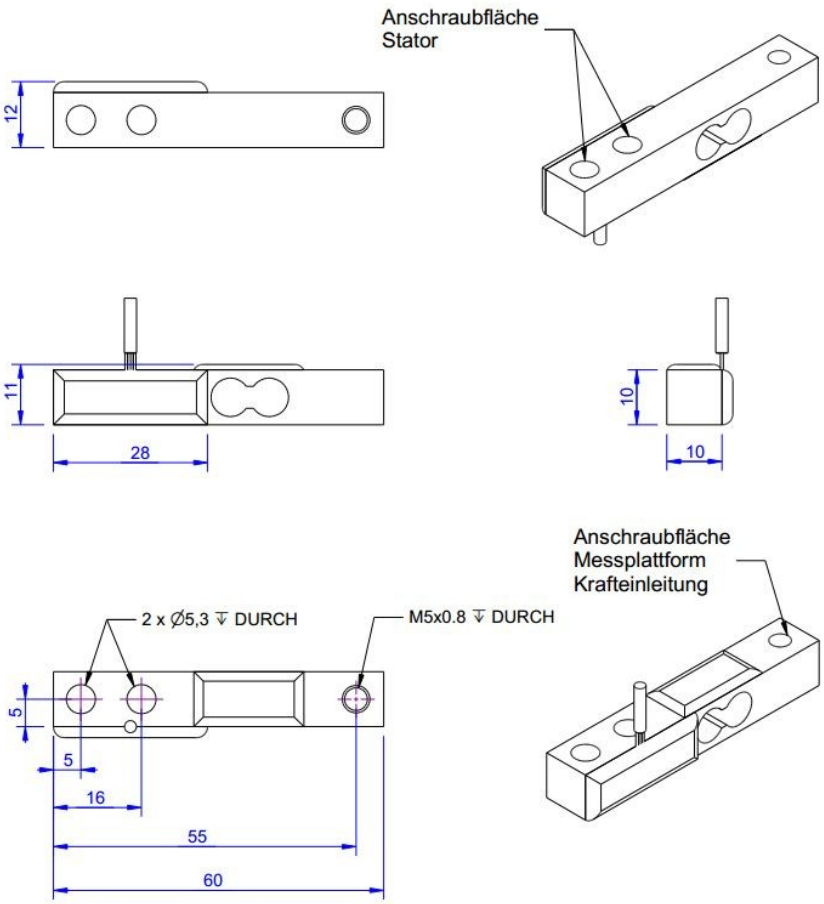


ME-Meßsysteme GmbH
Eduard-Maurer-Str. 9
DE-16761 Hennigsdorf

Tel: +49 (0)3302 8982 4 10
Mail: vertrieb@me-systeme.de
Web: www.me-systeme.de

Stand: 20.03.2026

## Technical Data

| Basic Data | | Unit |
|---|---|---|
| Type | Kraftsensor | |
| Force direction | Tension/Compression | |
| Rated force Fx | 200 | N |
| Force introduction | Internal thread | |
| Dimension 1 | 1xM5x0,8 | |
| Sensor Fastening | Through-hole | |
| Dimension 2 | 2xØ5,3 | |
| Operating force | 400 | %FS |
| Rated displacement | 0.1 | mm |
| Lateral force limit | 500 | %FS |
| Material | Stainless steel | |
| Natural frequency fx | 2500 | Hz |
| Dimensions | 60mm x 10mm x 10mm | |
| Height | 10 | mm |
| Length or Diameter | 60 | mm |
| Breaking force | 700 | % |
| Variants | 5N... 1kN | |

ME-Meßsysteme GmbH
Eduard-Maurer-Str. 9
DE-16761 Hennigsdorf

Tel: +49 (0)3302 8982 4 10
Mail: vertrieb@me-systeme.de
Web: www.me-systeme.de

Stand: 20.03.2026

| Electrical Data | | Unit |
|---|---|---|
| Input resistance | 420 | Ohm |
| Tolerance input resistance | 30 | Ohm |
| Output resistance | 350 | Ohm |
| Tolerance output resistance | 3 | Ohm |
| Insulation resistance | 5x10^9 | Ohm |
| Rated range of excitation voltage from | 2.5 | V |
| Rated range of excitation voltage to | 5 | V |
| Operating range of excitation voltage from | 1 | V |
| Operating range of excitation voltage to | 10 | V |
| Zero signal | 0.05 | mV/V |
| Rated output | 1 | mV/V / FS |
| relative error of characteristic value | 0.1 | %FS |

| Accuracy Data | | Unit |
|---|---|---|
| Accuracy class | 0,1 | |
| Relative linearity error | 0.1 | %FS |
| Relative zero signal hysteresis | 0.1 | %FS |
| Temperature effect on zero signal | 0.02 | %FS/K |
| Temperature effect on characteristic value | 0.01 | %RD/K |
| Relative creep | 0.1 | %FS |
| **Environmental Data** | | **Unit** |
| Rated temperature range from | -10 | °C |
| Rated temperature range to | 70 | °C |
| Operating temperature range from | -10 | °C |
| Operating temperature range to | 85 | °C |
| Storage temperature range from | -10 | °C |
| Storage temperature range to | 85 | °C |
| Environmental protection | IP65 | |

Abbreviation: RD: „Reading“; FS: „Full Scale“;1) The exact characteristic value is indicated in the test report.

ME-Meßsysteme GmbH
Eduard-Maurer-Str. 9
DE-16761 Hennigsdorf

Tel: +49 (0)3302 8982 4 10
Mail: vertrieb@me-systeme.de
Web: www.me-systeme.de

Stand: 20.03.2026

## Pin Assignment

| Channel | Symbol | Description | Wire color | PIN |
|---|---|---|---|---|
| | +Us | positive bridge supply | red | |
| | -Us | negative bridge supply | black | |
| | +Ud | positive bridge output | green | |
| | -Ud | negative bridge output | white | |

Pressure load: positive output signal.Shield- transparent.

ME-Meßsysteme GmbH
Eduard-Maurer-Str. 9
DE-16761 Hennigsdorf

Tel: +49 (0)3302 8982 4 10
Mail: vertrieb@me-systeme.de
Web: www.me-systeme.de

Stand: 20.03.2026