Force Sensor KD45 5N

Item number: 24

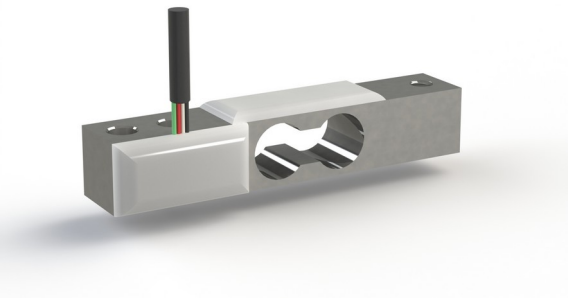

The force sensor KD45 has the geometry of a miniature load cell. It is fastened on one side using the through holes ø3.2. There is a thread M3 for force transmission.

Force transmission is displaced parallel under loading. The force sensor tolerates displacements of force transmission and lateral forces due to its design as a double beam.

The force sensor KD45 is designed as a multi-range sensor. The accuracy of 0.1% is already reached at a nominal output of 0.5mV/V. This means that the zero point stability is 4 times higher than in a sensor with nominal output of 2mV/V. The KD45 force sensor can be used up to an output signal of 2mV/V or up to four times the specified nominal force.

The KD45 sensor is available in aluminum and steel versions. The steel version is optionally designed for a maximum operating temperature of 150°C. The steel version is suitable for test benches with high continuous loads.

Optionale Sonderausführung

- Temperaturbereiche: -40°C ... 180°C

ME-Meßsysteme GmbH
Eduard-Maurer-Str. 9
DE-16761 Hennigsdorf

Tel: +49 (0)3302 8982 4 10
Mail: vertrieb@me-systeme.de
Web: www.me-systeme.de

Stand: 11.04.2026

Technical Drawing

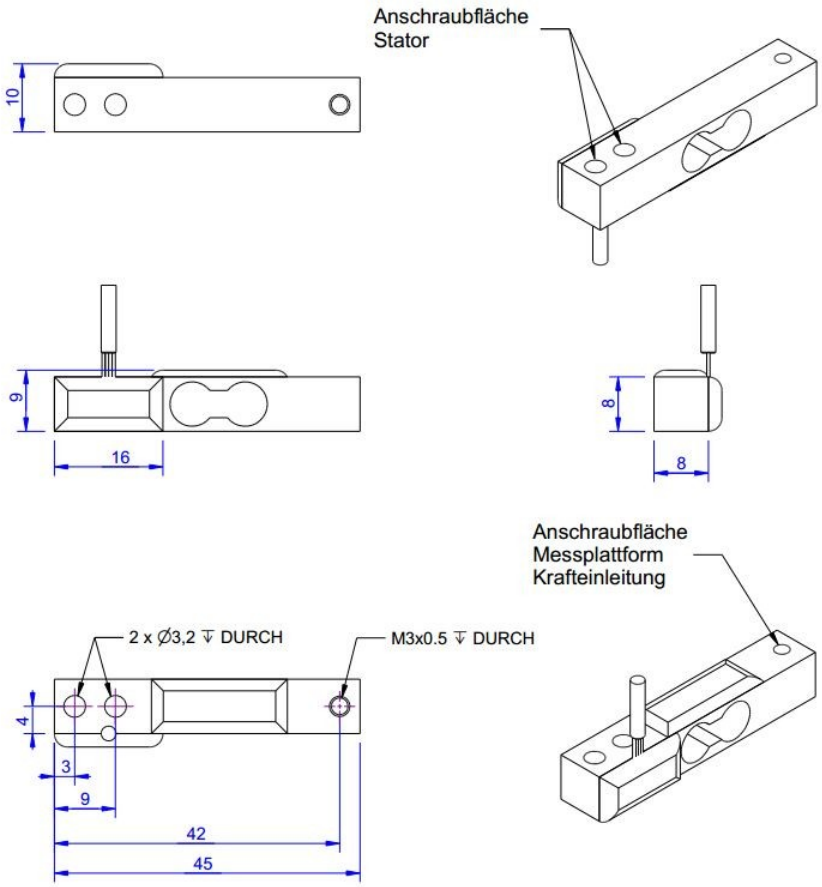

Technical Data

Basic Data		Unit
Type	Kraftsensor	
Force direction	Tension/Compression	
Rated force Fx	5	N
Force introduction	Internal thread	
Dimension 1	1xM3x0,5	
Sensor Fastening	Through-hole	
Dimension 2	2xØ3,2	
Operating force	400	%FS
Rated displacement	0.1	mm
Lateral force limit	500	%FS
Material	alluminum-alloy	
Natural frequency fx	600	
Dimensions	45mm x 8mm x 8mm	
Height	8	mm
Length or Diameter	45	mm
Variants	2n... 50n	

ME-Meßsysteme GmbH
Eduard-Maurer-Str. 9
DE-16761 Hennigsdorf

Tel: +49 (0)3302 8982 4 10
Mail: vertrieb@me-systeme.de
Web: www.me-systeme.de

Stand: 11.04.2026

Electrical Data		Unit
Input resistance	420	Ohm
Tolerance input resistance	30	Ohm
Output resistance	350	Ohm
Tolerance output resistance	3	Ohm
Insulation resistance	5x10^9	Ohm
Rated range of excitation voltage from	2.5	V
Rated range of excitation voltage to	5	V
Operating range of excitation voltage from	1	V
Operating range of excitation voltage to	10	V
Zero signal	0.05	mV/V
Rated output	0.5	mV/V / FS
relative error of characteristic value	0.1	%

Accuracy Data		Unit
Accuracy class	0,1	
Relative linearity error	0.1	%FS
Relative zero signal hysteresis	0.1	%FS
Temperature effect on zero signal	0.02	%FS/K
Temperature effect on characteristic value	0.01	%RD/K
Relative creep	0.1	%FS
Environmental Data		**Unit**
Rated temperature range from	-10	°C
Rated temperature range to	70	°C
Operating temperature range from	-10	°C
Operating temperature range to	85	°C
Storage temperature range from	-10	°C
Storage temperature range to	85	°C
Environmental protection	IP65	

Abbreviation: RD: „Reading“; FS: „Full Scale“;1) The exact characteristic value is indicated in the test report.

ME-Meßsysteme GmbH
Eduard-Maurer-Str. 9
DE-16761 Hennigsdorf

Tel: +49 (0)3302 8982 4 10
Mail: vertrieb@me-systeme.de
Web: www.me-systeme.de

Stand: 11.04.2026

Pin Assignment

Channel	Symbol	Description	Wire color	PIN
	+Us	positive bridge supply	red	
	-Us	negative bridge supply	black	
	+Ud	positive bridge output	green	
	-Ud	negative bridge output	white	

Pressure load: positive output signal.Shield- transparent.

ME-Meßsysteme GmbH
Eduard-Maurer-Str. 9
DE-16761 Hennigsdorf

Tel: +49 (0)3302 8982 4 10
Mail: vertrieb@me-systeme.de
Web: www.me-systeme.de

Stand: 11.04.2026