# Force Sensor KD39 50N

Item number: 13127

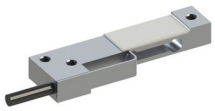

The force sensor KD39 is especially suitable for integration in flat measuring plattforms, due to its height of 6mm and 12mm width. In measuring platforms three pieces of KD39 carry one measuring plate.

The overhangs on the top and bottom of the force sensor allow mounting on a flat plate.

## Optionale Sonderausführung

- Temperaturbereiche: -40°C ... 180°C

ME-Meßsysteme GmbH
Eduard-Maurer-Str. 9
DE-16761 Hennigsdorf

Tel: +49 (0)3302 8982 4 10
Mail: vertrieb@me-systeme.de
Web: www.me-systeme.de

Stand: 20.03.2026

## Technical Drawing

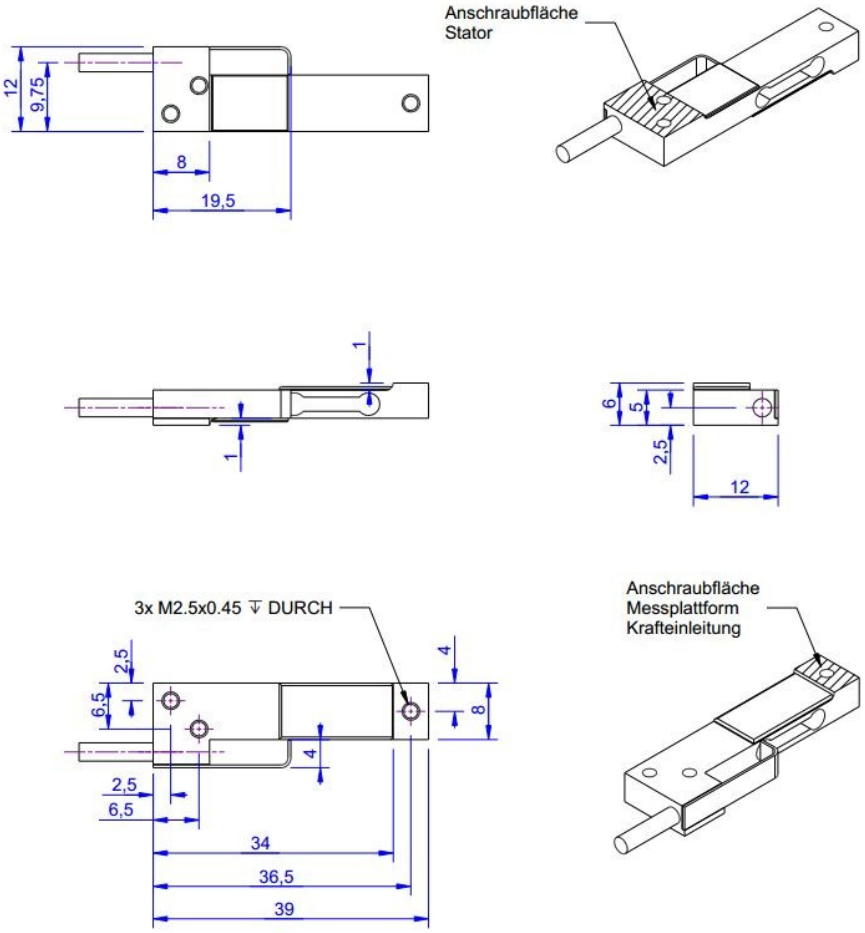


ME-Meßsysteme GmbH
Eduard-Maurer-Str. 9
DE-16761 Hennigsdorf

Tel: +49 (0)3302 8982 4 10
Mail: vertrieb@me-systeme.de
Web: www.me-systeme.de

Stand: 20.03.2026

## Technical Data

| Basic Data | | Unit |
|---|---|---|
| Type | Kraftsensor | |
| Force direction | Tension/Compression | |
| Force introduction | Internal thread | |
| Dimension 1 | M2,5x0,45 | |
| Sensor Fastening | Internal thread | |
| Dimension 2 | M2,5x0,45 | |
| Operating force | 200 | %FS |
| Rated displacement | 0.1 | mm |
| Lateral force limit | 200 | %FS |
| Material | alluminum-alloy | |
| Dimensions | 39mm x 12mm x 6mm | |
| Height | 6 | mm |
| Length or Diameter | 39 | mm |
| Variants | 5N... 50N | |

ME-Meßsysteme GmbH
Eduard-Maurer-Str. 9
DE-16761 Hennigsdorf

Tel: +49 (0)3302 8982 4 10
Mail: vertrieb@me-systeme.de
Web: www.me-systeme.de

Stand: 20.03.2026

| Electrical Data | | Unit |
|---|---|---|
| Input resistance | 390 | Ohm |
| Tolerance input resistance | 40 | Ohm |
| Output resistance | 350 | Ohm |
| Tolerance output resistance | 3 | Ohm |
| Insulation resistance | 2 | GOhm |
| Rated range of excitation voltage from | 2.5 | V |
| Rated range of excitation voltage to | 5 | V |
| Operating range of excitation voltage from | 1 | V |
| Operating range of excitation voltage to | 10 | V |
| Zero signal | 0.05 | mV/V |
| Rated output | 1 | mV/V |
| Characteristic value range from | 0.9 | mV/V |
| Characteristic value range to | 1.3 | mV/V |

| Accuracy Data | | Unit |
|---|---|---|
| Accuracy class | 0,1 | |
| Relative linearity error | 0.02 | %FS |
| Relative zero signal hysteresis | 0.02 | %FS |
| Temperature effect on zero signal | 0.02 | %FS/K |
| Temperature effect on characteristic value | 0.01 | %RD/K |
| Relative creep | 0.1 | %FS |
| **Environmental Data** | | **Unit** |
| Rated temperature range from | -10 | °C |
| Rated temperature range to | 70 | °C |
| Operating temperature range from | -10 | °C |
| Operating temperature range to | 85 | °C |
| Storage temperature range from | -10 | °C |
| Storage temperature range to | 85 | °C |
| Environmental protection | IP65 | |

ME-Meßsysteme GmbH
Eduard-Maurer-Str. 9
DE-16761 Hennigsdorf

Tel: +49 (0)3302 8982 4 10
Mail: vertrieb@me-systeme.de
Web: www.me-systeme.de

Stand: 20.03.2026

Abbreviation: RD: „Reading“; FS: „Full Scale“;1) The exact characteristic value is indicated in the test report.

## Pin Assignment

| Channel | Symbol | Description | Wire color | PIN |
|---|---|---|---|---|
| | +Us | positive bridge supply | red | |
| | -Us | negative bridge supply | black | |
| | +Ud | positive bridge output | green | |
| | -Ud | negative bridge output | white | |

Pressure load: positive output signal.Shield- transparent.

ME-Meßsysteme GmbH
Eduard-Maurer-Str. 9
DE-16761 Hennigsdorf

Tel: +49 (0)3302 8982 4 10
Mail: vertrieb@me-systeme.de
Web: www.me-systeme.de

Stand: 20.03.2026