Force Sensor KD33 50mN

Item number: 9736



The force sensor KD33 is used for force measurement in the range of millinewton with a resolution of approx. 1 mg (10 nN). The low measuring range of 50 mN (5g) is achieved by the use of semiconductor strain gauges on a double beam made of a titanium alloy. Due to the use of semiconductor strain gauges, the sensor is very robust. The force sensor can be exposed to a force of up to 10N without damage. The natural frequency of the sensor without additional masses is 800Hz.

Due to the small measuring range, the mounting position of the sensor must be selected in such a way that the force acts in a horizontal direction. This is achieved .B by a vertical installation position ("standing"), or by a horizontal insertion with a force induction in the horizontal plane. The ideal pantry is 2.5V. For this purpose, the measuring amplifiers GSV-3 in the measuring range 3.5 mV/V and GSV-8 in the measuring range 7 mV/V. Higher supply voltages of e.B. 5V are technically possible, but cause a significant shift of the zero signal by approx. +- 2mV/V.

The force sensor KD33 is largely protected against environmental influences (light, infrared radiation, air flow) by a housing. Nevertheless, for example.B the approximation of a palm to a few cm causes an immediate upset of the

Optionale Sonderausführung

- Temperaturbereiche: -40°C ... 180°C

ME-Meßsysteme GmbH
Eduard-Maurer-Str. 9
DE-16761 Hennigsdorf

Tel: +49 (0)3302 8982 4 10
Mail: vertrieb@me-systeme.de
Web: www.me-systeme.de

Stand: 24.04.2026

Technical Drawing

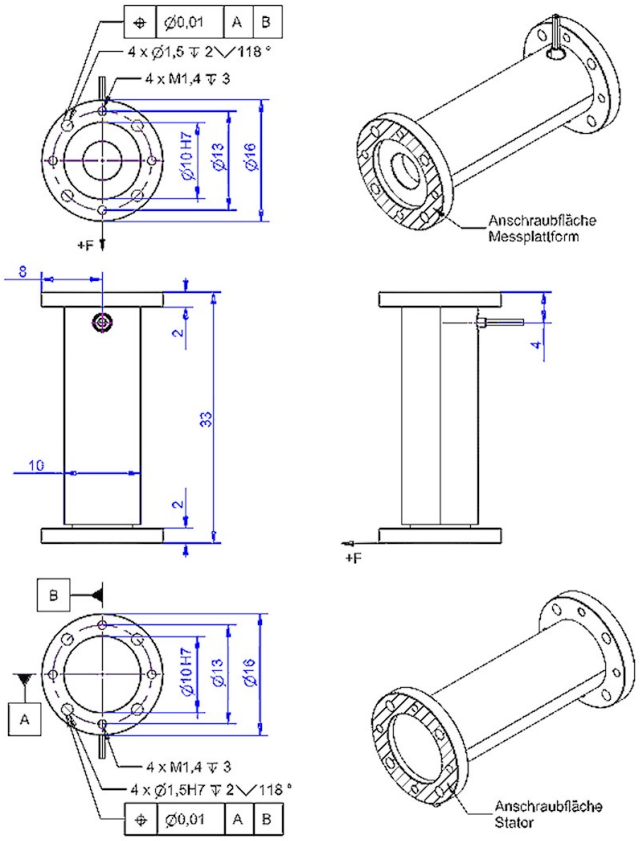

ME-Meßsysteme GmbH
Eduard-Maurer-Str. 9
DE-16761 Hennigsdorf

Tel: +49 (0)3302 8982 4 10
Mail: vertrieb@me-systeme.de
Web: www.me-systeme.de

Stand: 24.04.2026

Technical Data

Basic Data		Unit
Type	Kraftsensor	
Force direction	Tension/Compression	
Rated force Fx	50	mN
Force introduction	Fläche	
Dimension 1	Ø16	
Sensor Fastening	Fläche	
Dimension 2	Ø16	
Operating force	200	mN
Rated displacement	2	µm
Lateral force limit	100	mN
Natural frequency fx	800	Hz
Dimensions	33mm x 16mm	
Height	16	mm
Length or Diameter	33	mm
Variants	50mN	

Electrical Data		Unit
Input resistance	480	Ohm
Tolerance input resistance	50	Ohm
Output resistance	480	Ohm
Tolerance output resistance	50	Ohm
Insulation resistance	2	GOhm
Rated range of excitation voltage from	2.5	V
Operating range of excitation voltage from	1	V
Operating range of excitation voltage to	5	V
Zero signal	0.5	mV/V
Characteristic value range from	2	mV/V
Characteristic value range to	3	mV/V

ME-Meßsysteme GmbH
Eduard-Maurer-Str. 9
DE-16761 Hennigsdorf

Tel: +49 (0)3302 8982 4 10
Mail: vertrieb@me-systeme.de
Web: www.me-systeme.de

Stand: 24.04.2026

Accuracy Data		Unit
Accuracy class	0,5	
Relative linearity error	0.5	%
Relative zero signal hysteresis	0.5	%
Temperature effect on zero signal	-4	%FS/K
Temperature effect on characteristic value	0.5	%RD/K
Relative creep	0.5	%RD/K
Relative repeatability error	0.5	%RD
Environmental Data		**Unit**
Rated temperature range from	10	°C
Rated temperature range to	30	°C
Operating temperature range from	10	°C
Operating temperature range to	50	°C
Environmental protection	IP40	

Abbreviation: RD: „Reading"; FS: „Full Scale";1) The exact characteristic value is indicated in the test report.

Pin Assignment

Channel	Symbol	Description	Wire color	PIN
	+Us	positive bridge supply	brown	
	-Us	negative bridge supply	white	
	+Ud	positive bridge output	green	
	-Ud	negative bridge output	yellow	

Screen - transparent. Pressure load : positive output signal

ME-Meßsysteme GmbH
Eduard-Maurer-Str. 9
DE-16761 Hennigsdorf

Tel: +49 (0)3302 8982 4 10
Mail: vertrieb@me-systeme.de
Web: www.me-systeme.de

Stand: 24.04.2026