Force Sensor KD191 200kg

Item number: 963

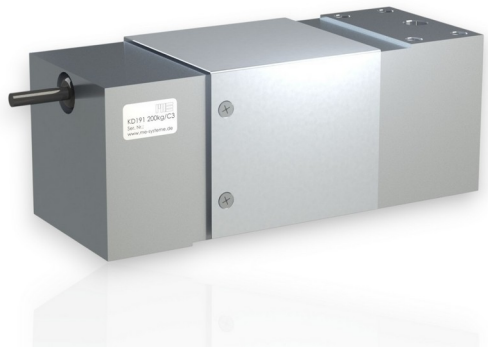

The force sensor KD 191 is used in weighing platforms and in test beds. It allows the installation of a platform sized 900 x 900mm (or 600mm x 600mm for the load range 1000kg) for force introduction.
The solid construction allows force transmission over a large surface and incorporates lateral forces and torque without any significant loss of accuracy. The measurement error resulting from an eccentric load of 25% of the nominal load is less than 0.01% of the reference input. This force sensor is ideal for use in industrial test beds and sports medicine.
The force sensor KD 191 conforms to the stringent European requirements for use in trade approved scales. Thanks to a double epoxy resin cover, this force sensor is also able to withstand high humidity. It fulfills the 12-day moisture test according to IEC 68-2-30.

Optional special version

- Temperature range: -40°C to 180°C
- Vacuum version from 10^{-5} mbar
- Pressure range up to 8 bar
- Suitable for cleanrooms

ME-Meßsysteme GmbH
Eduard-Maurer-Str. 9
DE-16761 Hennigsdorf

Tel: +49 (0)3302 8982 4 10
Mail: vertrieb@me-systeme.de
Web: www.me-systeme.de

Stand: 19.03.2026

Technical Drawing

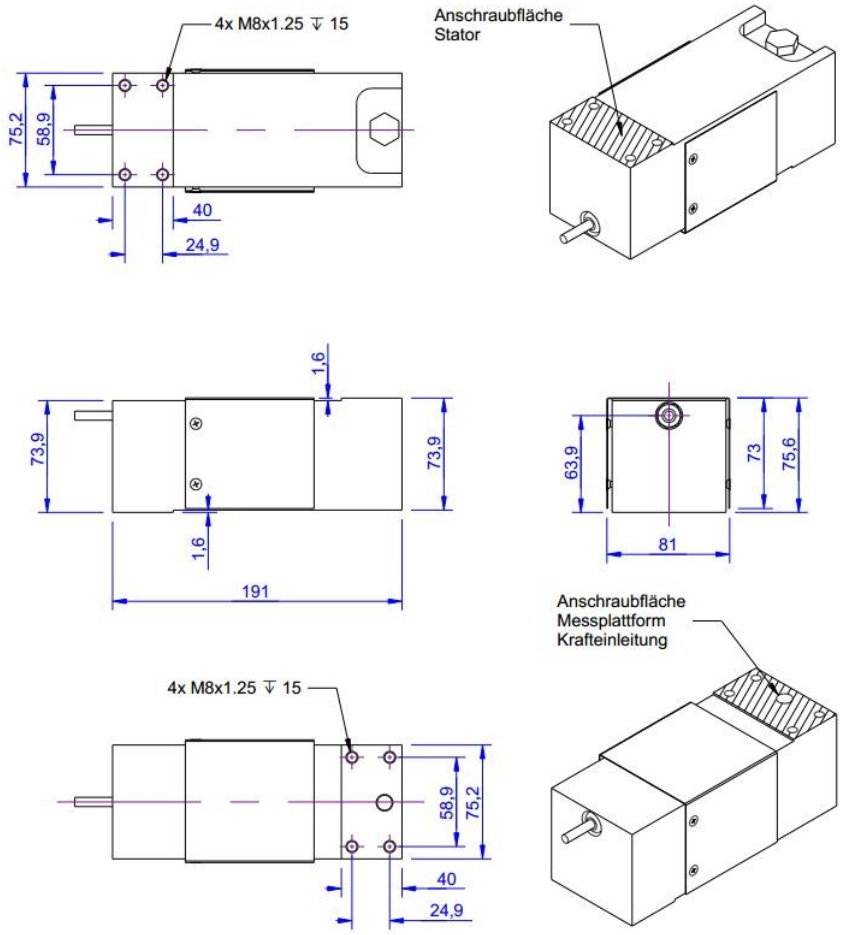

ME-Meßsysteme GmbH
Eduard-Maurer-Str. 9
DE-16761 Hennigsdorf

Tel: +49 (0)3302 8982 4 10
Mail: vertrieb@me-systeme.de
Web: www.me-systeme.de

Stand: 19.03.2026

Technical Data

Basic Data		Unit
Type	Kraftsensor	
Force direction	Tension/Compression	
Rated force Fx	200	kg
Force introduction	Internal thread	
Dimension 1	4xM8x1,25	
Sensor Fastening	Internal thread	
Dimension 2	4xM8x1,25	
Operating force	150	%FS
Rated displacement	0.4	mm
Lateral force limit	500	%FS
Material	alluminum-alloy	
Natural frequency fx	1	kHz
Dimensions	191mm x 81mm x 76mm	
Height	76	mm
Length or Diameter	191	mm
Variants	50kg... 1t	

ME-Meßsysteme GmbH
Eduard-Maurer-Str. 9
DE-16761 Hennigsdorf

Tel: +49 (0)3302 8982 4 10
Mail: vertrieb@me-systeme.de
Web: www.me-systeme.de

Stand: 19.03.2026

Electrical Data		Unit
Input resistance	390	Ohm
Tolerance input resistance	40	Ohm
Output resistance	350	Ohm
Tolerance output resistance	-3	Ohm
Insulation resistance	5x10^9	Ohm
Rated range of excitation voltage from	2.5	V
Rated range of excitation voltage to	5	V
Operating range of excitation voltage from	1	V
Operating range of excitation voltage to	10	V
Zero signal	10	mV/V
Rated output	2	mV/V / FS
relative error of characteristic value	0.2	mV/V / FS

Accuracy Data		Unit
Accuracy class	0,1	
Relative linearity error	0.05	%FS
Relative zero signal hysteresis	0.05	%FS
Temperature effect on zero signal	0.01	%FS/K
Temperature effect on characteristic value	0.005	%RD/K
Relative creep	0.02	%FS
Environmental Data		**Unit**
Rated temperature range from	-10	°C
Rated temperature range to	70	°C
Operating temperature range from	-10	°C
Operating temperature range to	85	°C
Storage temperature range from	-10	°C
Storage temperature range to	85	°C
Environmental protection	IP66	

Abbreviation: RD: „Reading“; FS: „Full Scale“;1) The exact characteristic value is indicated in the test report.

ME-Meßsysteme GmbH
Eduard-Maurer-Str. 9
DE-16761 Hennigsdorf

Tel: +49 (0)3302 8982 4 10
Mail: vertrieb@me-systeme.de
Web: www.me-systeme.de

Stand: 19.03.2026

Pin Assignment

Channel	Symbol	Description	Wire color	PIN
	+Us	positive bridge supply	green	
	-Us	negative bridge supply	black	
	+Ud	positive bridge output	red	
	-Ud	negative bridge output	white	
	+Uf	positive sense lead	blue	
	-Uf	negative sense lead	brown	

Pressure load: positive output signal.
Shield- transparent.

ME-Meßsysteme GmbH
Eduard-Maurer-Str. 9
DE-16761 Hennigsdorf

Tel: +49 (0)3302 8982 4 10
Mail: vertrieb@me-systeme.de
Web: www.me-systeme.de

Stand: 19.03.2026