# Force Sensor KD191 100kg

Item number: 962

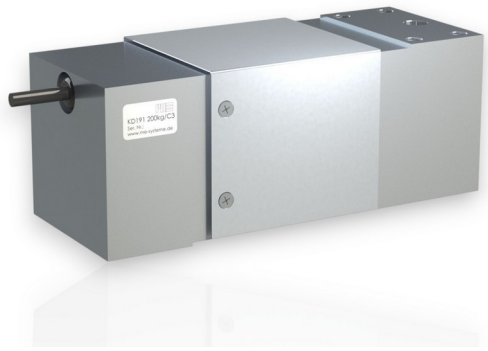

The force sensor KD 191 is used in weighing platforms and in test beds. It allows the installation of a platform sized 900 x 900mm (or 600mm x 600mm for the load range 1000kg) for force introduction.
The solid construction allows force transmission over a large surface and incorporates lateral forces and torque without any significant loss of accuracy. The measurement error resulting from an eccentric load of 25% of the nominal load is less than 0.01% of the reference input. This force sensor is ideal for use in industrial test beds and sports medicine.
The force sensor KD 191 conforms to the stringent European requirements for use in trade approved scales. Thanks to a double epoxy resin cover, this force sensor is also able to withstand high humidity. It fulfills the 12-day moisture test according to IEC 68-2-30.

## Optional special version

- Temperature range: -40°C to 180°C
- Vacuum version from $10^{-5}$ mbar
- Pressure range up to 8 bar
- Suitable for cleanrooms

ME-Meßsysteme GmbH
Eduard-Maurer-Str. 9
DE-16761 Hennigsdorf

Tel: +49 (0)3302 8982 4 10
Mail: vertrieb@me-systeme.de
Web: www.me-systeme.de

Stand: 19.03.2026

## Technical Drawing

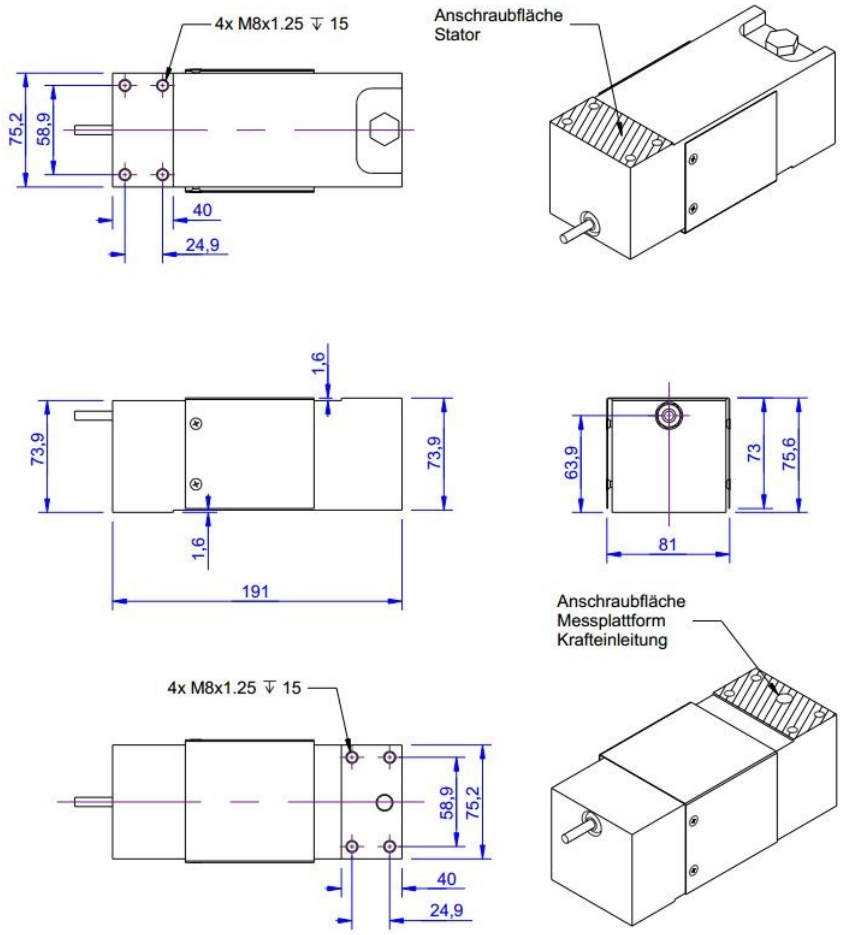


ME-Meßsysteme GmbH
Eduard-Maurer-Str. 9
DE-16761 Hennigsdorf

Tel: +49 (0)3302 8982 4 10
Mail: vertrieb@me-systeme.de
Web: www.me-systeme.de

Stand: 19.03.2026

## Technical Data

| Basic Data | | Unit |
|---|---|---|
| Type | Kraftsensor | |
| Force direction | Tension/Compression | |
| Rated force Fx | 100 | kg |
| Force introduction | Internal thread | |
| Dimension 1 | 4xM8x1,25 | |
| Sensor Fastening | Internal thread | |
| Dimension 2 | 4xM8x1,25 | |
| Operating force | 150 | %FS |
| Rated displacement | 0.4 | mm |
| Lateral force limit | 500 | %FS |
| Material | alluminum-alloy | |
| Natural frequency fx | 1 | kHz |
| Dimensions | 191mm x 81mm x 76mm | |
| Height | 76 | mm |
| Length or Diameter | 191 | mm |
| Variants | 50kg... 1t | |

ME-Meßsysteme GmbH
Eduard-Maurer-Str. 9
DE-16761 Hennigsdorf

Tel: +49 (0)3302 8982 4 10
Mail: vertrieb@me-systeme.de
Web: www.me-systeme.de

Stand: 19.03.2026

| Electrical Data | | Unit |
|---|---|---|
| Input resistance | 390 | Ohm |
| Tolerance input resistance | 40 | Ohm |
| Output resistance | 350 | Ohm |
| Tolerance output resistance | -3 | Ohm |
| Insulation resistance | 5x10^9 | Ohm |
| Rated range of excitation voltage from | 2.5 | V |
| Rated range of excitation voltage to | 5 | V |
| Operating range of excitation voltage from | 1 | V |
| Operating range of excitation voltage to | 10 | V |
| Zero signal | 10 | mV/V |
| Rated output | 2 | mV/V / FS |
| relative error of characteristic value | 0.2 | mV/V / FS |

| Accuracy Data | | Unit |
|---|---|---|
| Accuracy class | 0,04 | |
| Relative linearity error | 0.05 | %FS |
| Relative zero signal hysteresis | 0.05 | %FS |
| Temperature effect on zero signal | 0.01 | %FS/K |
| Temperature effect on characteristic value | 0.005 | %RD/K |
| Relative creep | 0.02 | %FS |
| **Environmental Data** | | **Unit** |
| Rated temperature range from | -10 | °C |
| Rated temperature range to | 70 | °C |
| Operating temperature range from | -10 | °C |
| Operating temperature range to | 85 | °C |
| Storage temperature range from | -10 | °C |
| Storage temperature range to | 85 | °C |
| Environmental protection | IP66 | |

Abbreviation: RD: „Reading“; FS: „Full Scale“;1) The exact characteristic value is indicated in the test report.

ME-Meßsysteme GmbH
Eduard-Maurer-Str. 9
DE-16761 Hennigsdorf

Tel: +49 (0)3302 8982 4 10
Mail: vertrieb@me-systeme.de
Web: www.me-systeme.de

Stand: 19.03.2026

## Pin Assignment

| Channel | Symbol | Description | Wire color | PIN |
|---|---|---|---|---|
| | +Us | positive bridge supply | green | |
| | -Us | negative bridge supply | black | |
| | +Ud | positive bridge output | red | |
| | -Ud | negative bridge output | white | |
| | +Uf | positive sense lead | blue | |
| | -Uf | negative sense lead | brown | |

Pressure load: positive output signal.
Shield- transparent.

ME-Meßsysteme GmbH
Eduard-Maurer-Str. 9
DE-16761 Hennigsdorf

Tel: +49 (0)3302 8982 4 10
Mail: vertrieb@me-systeme.de
Web: www.me-systeme.de

Stand: 19.03.2026