Force Sensor KD18s 10N/ax

Item number: 11587



Highlights

- Ultraminiature version
- S-Form tension and compression sensor
- integrated overload protection
- radial or axial cable outlet

The KD18s ultra-miniature force sensor has been specially designed to measure the smallest forces for tensile and compressive measurements.
Thanks to the integrated protection against overload, this force sensor is still safe to use even in the measuring range of 100 mN.
The robust titanium was used to manufacture the smallest version with 100 mN.
Depending on the customer application, the KD18s force sensor is offered in two versions: with the side and the vertical cable outlet.

Optional special version

- Temperature range: -40°C to 180°C
- Vacuum version from 10^{-5} mbar
- Pressure range up to 8 bar
- Suitable for cleanrooms

ME-Meßsysteme GmbH
Eduard-Maurer-Str. 9
DE-16761 Hennigsdorf

Tel: +49 (0)3302 8982 4 10
Mail: vertrieb@me-systeme.de
Web: www.me-systeme.de

Stand: 20.03.2026

Technical Drawing

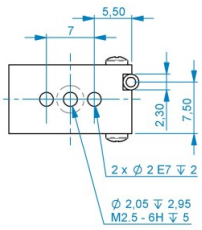

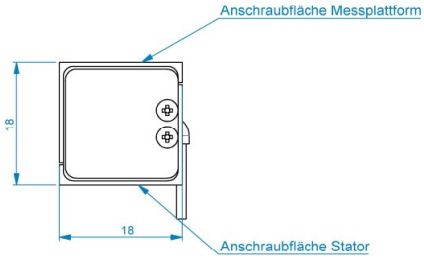

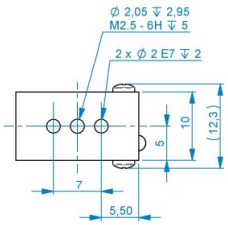

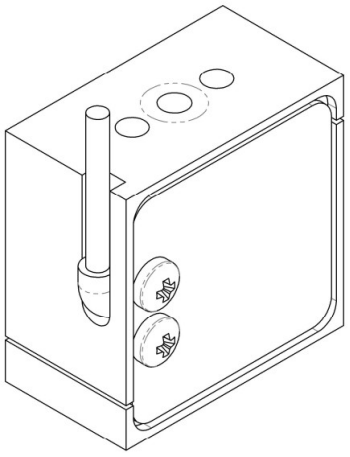

Variante mit Kabel vertikal

ME-Meßsysteme GmbH
Eduard-Maurer-Str. 9
DE-16761 Hennigsdorf

Tel: +49 (0)3302 8982 4 10
Mail: vertrieb@me-systeme.de
Web: www.me-systeme.de

Stand: 20.03.2026

Technical Data

Basic Data		Unit
Type	Kraftsensor	
Force direction	Tension/Compression	
Rated force Fx	10	N
Force introduction	Internal thread	
Dimension 1	M2,5	
Sensor Fastening	Internal thread	
Dimension 2	M2,5	
Operating force	200	%FS
Rated displacement	0.2	mm
Lateral force limit	100	%FS
Material	alluminum-alloy	
Natural frequency fx	1	kHz
Dimensions	18mm x 18mm x 12.3mm	
Height	18	mm
Length or Diameter	18	mm
Variants	100mN... 10N	

ME-Meßsysteme GmbH
Eduard-Maurer-Str. 9
DE-16761 Hennigsdorf

Tel: +49 (0)3302 8982 4 10
Mail: vertrieb@me-systeme.de
Web: www.me-systeme.de

Stand: 20.03.2026

Electrical Data		Unit
Input resistance	390	Ohm
Tolerance input resistance	40	Ohm
Output resistance	350	Ohm
Tolerance output resistance	1.5	Ohm
Insulation resistance	5	GOhm
Rated range of excitation voltage from	2.5	V
Rated range of excitation voltage to	5	V
Operating range of excitation voltage from	1	V
Operating range of excitation voltage to	10	V
Zero signal	0.1	mV/V
Characteristic value range from	1	mV/V
Characteristic value range to	2	mV/V

Accuracy Data		Unit
Accuracy class	0,1	
Relative linearity error	0.02	%FS
Relative zero signal hysteresis	0.02	%FS
Temperature effect on zero signal	0.02	%FS/K
Temperature effect on characteristic value	0.01	%RD/K
Relative creep	0.1	%FS
Environmental Data		**Unit**
Rated temperature range from	-10	°C
Rated temperature range to	70	°C
Operating temperature range from	-10	°C
Operating temperature range to	85	°C
Storage temperature range from	-10	°C
Storage temperature range to	85	°C
Environmental protection	IP65	

Abbreviation: RD: „Reading"; FS: „Full Scale";1) The exact nominal sensitivity is indicated in the test report;Pressure load: positive output signal

ME-Meßsysteme GmbH
Eduard-Maurer-Str. 9
DE-16761 Hennigsdorf

Tel: +49 (0)3302 8982 4 10
Mail: vertrieb@me-systeme.de
Web: www.me-systeme.de

Stand: 20.03.2026

Pin Assignment

Channel	Symbol	Description	Wire color	PIN
	+Us	positive bridge supply	brown	
	-Us	negative bridge supply	white	
	+Ud	positive bridge output	green	
	-Ud	negative bridge output	yellow	

Screen - transparent. Pressure load : positive output signal

ME-Meßsysteme GmbH
Eduard-Maurer-Str. 9
DE-16761 Hennigsdorf

Tel: +49 (0)3302 8982 4 10
Mail: vertrieb@me-systeme.de
Web: www.me-systeme.de

Stand: 20.03.2026