# Force Sensor KD18s 100mN

Item number: 11219



## Highlights

- Ultraminiature version
- S-Form tension and compression sensor
- integrated overload protection
- radial or axial cable outlet

The KD18s ultra-miniature force sensor has been specially designed to measure the smallest forces for tensile and compressive measurements.
Thanks to the integrated protection against overload, this force sensor is still safe to use even in the measuring range of 100 mN.
The robust titanium was used to manufacture the smallest version with 100 mN.
Depending on the customer application, the KD18s force sensor is offered in two versions: with the side and the vertical cable outlet.

## Optional special version

- Temperature range: -40°C to 180°C
- Vacuum version from $10^{-5}$ mbar
- Pressure range up to 8 bar
- Suitable for cleanrooms

ME-Meßsysteme GmbH
Eduard-Maurer-Str. 9
DE-16761 Hennigsdorf

Tel: +49 (0)3302 8982 4 10
Mail: vertrieb@me-systeme.de
Web: www.me-systeme.de

Stand: 20.03.2026

## Technical Drawing

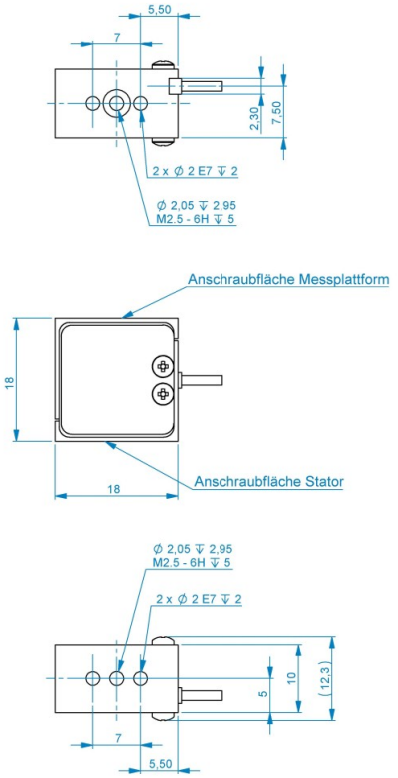


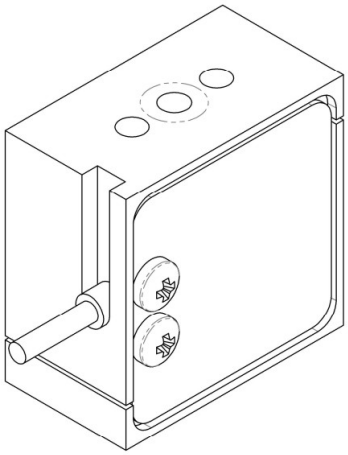

Variante mit Kabel horizontal

ME-Meßsysteme GmbH
Eduard-Maurer-Str. 9
DE-16761 Hennigsdorf

Tel: +49 (0)3302 8982 4 10
Mail: vertrieb@me-systeme.de
Web: www.me-systeme.de

Stand: 20.03.2026

## Technical Data

| Basic Data | | Unit |
|---|---|---|
| Type | Kraftsensor | |
| Force direction | Tension/Compression | |
| Rated force Fx | 100 | mN |
| Force introduction | Internal thread | |
| Dimension 1 | M2,5 | |
| Sensor Fastening | Internal thread | |
| Dimension 2 | M2,5 | |
| Operating force | 200 | %FS |
| Rated displacement | 0.08 | mm |
| Lateral force limit | 100 | %FS |
| Material | titanium | |
| Natural frequency fx | 1 | kHz |
| Dimensions | 18mm x 18mm x 12.3mm | |
| Height | 18 | mm |
| Length or Diameter | 18 | mm |
| Variants | 100mN... 10N | |

ME-Meßsysteme GmbH
Eduard-Maurer-Str. 9
DE-16761 Hennigsdorf

Tel: +49 (0)3302 8982 4 10
Mail: vertrieb@me-systeme.de
Web: www.me-systeme.de

Stand: 20.03.2026

| Electrical Data | | Unit |
|---|---|---|
| Input resistance | 450 | Ohm |
| Tolerance input resistance | 50 | Ohm |
| Output resistance | 450 | Ohm |
| Tolerance output resistance | 50 | Ohm |
| Insulation resistance | 5 | GOhm |
| Rated range of excitation voltage from | 2.5 | V |
| Rated range of excitation voltage to | 5 | V |
| Operating range of excitation voltage from | 1 | V |
| Operating range of excitation voltage to | 10 | V |
| Zero signal | 0.05 | mV/V |
| Zero signal from | -1 | mV/V |
| Zero signal to | 1 | mV/V |
| Characteristic value range from | 1.7 | mV/V |
| Characteristic value range to | 2.3 | mV/V |

ME-Meßsysteme GmbH
Eduard-Maurer-Str. 9
DE-16761 Hennigsdorf

Tel: +49 (0)3302 8982 4 10
Mail: vertrieb@me-systeme.de
Web: www.me-systeme.de

Stand: 20.03.2026

| Accuracy Data | | Unit |
|---|---|---|
| Accuracy class | 2 | |
| Relative linearity error | 0.2 | %FS |
| Relative zero signal hysteresis | 1 | %FS |
| Temperature effect on zero signal | 0.2 | %FS/K |
| Temperature effect on characteristic value | 0.1 | %RD/K |
| Relative creep | 0.1 | %FS |
| **Environmental Data** | | **Unit** |
| Rated temperature range from | -10 | °C |
| Rated temperature range to | 70 | °C |
| Operating temperature range from | -10 | °C |
| Operating temperature range to | 85 | °C |
| Storage temperature range from | -10 | °C |
| Storage temperature range to | 85 | °C |
| Environmental protection | IP65 | |

Abbreviation: RD: „Reading“; FS: „Full Scale“;1) The exact nominal sensitivity is indicated in the test report;Pressure load:  positive output signal

## Pin Assignment

| Channel | Symbol | Description | Wire color | PIN |
|---|---|---|---|---|
| | +Us | positive bridge supply | brown | |
| | -Us | negative bridge supply | white | |
| | +Ud | positive bridge output | green | |
| | -Ud | negative bridge output | yellow | |

Screen - transparent. Pressure load : positive output signal

## Mounting

The sensor's zero signal depends on the installation position and the bridge excitation voltage (in the order of magnitude of up to 100% of the measuring range). The optimal installation positions are  a) Application of force at the free end (opposite the cable outlet)  b) Application of force horizontally (gravity does not act on the free end)The optimal bridge excitation voltage is 2.5V. The maximum bridge excitation voltage should not be higher than 5V.

ME-Meßsysteme GmbH
Eduard-Maurer-Str. 9
DE-16761 Hennigsdorf

Tel: +49 (0)3302 8982 4 10
Mail: vertrieb@me-systeme.de
Web: www.me-systeme.de

Stand: 20.03.2026