Force Sensor KD12s 20N/AC

Item number: 15160



Highlights

- Ultraminiature force sensor
- Robust deformation body made of titanium Ti6Al-4V
- Potting and connecting cable made of PUR
- Protection class IP65, resistant to oils and fats
- Autoclavable version with Teflon cable and silicone casting

The KD12s force sensor is currently the smallest S-shaped force sensor.

The end faces of the force sensor each contain an M2.5 internal thread for attaching the sensor or for attaching a tool. The assembly of the sensor or a tool or a tool holder can be easily achieved thanks to the shoulders, a positive connection with an anti-twist device.

The sensor is available in two versions:

Standard version with a PUR cable and a potting with PUR plastic for use in temperature ranges up to 80°C
Autoclavable version KD12S 20N/AC with a Teflon cable and a silicone seal for use up to 150°C
The KD12s force sensor is made of titanium 3.7165 (Ti6Al-4V).

The KD12s force sensor is dimensioned for a nominal force of 20 N and can be used without defects up to a limit force of 60 N.

Areas of application for the sensor include tactile processes in microelectronics or optics and in minimally invasive surgery.

It is recommended to mount the sensor so that the connection cable is assigned to the immovable, permanently mounted side of the sensor.

Optional special version

- Protection class IP68: from rated force 200 N
- Vakuumvariante ab 10^{-5} mbar
- Pressure range up to 8 bar

ME-Meßsysteme GmbH
Eduard-Maurer-Str. 9
DE-16761 Hennigsdorf

Tel: +49 (0)3302 8982 4 10
Mail: vertrieb@me-systeme.de
Web: www.me-systeme.de

Stand: 20.03.2026

- Suitable for cleanrooms

ME-Meßsysteme GmbH
Eduard-Maurer-Str. 9
DE-16761 Hennigsdorf

Tel: +49 (0)3302 8982 4 10
Mail: vertrieb@me-systeme.de
Web: www.me-systeme.de

Stand: 20.03.2026

Technical Drawing

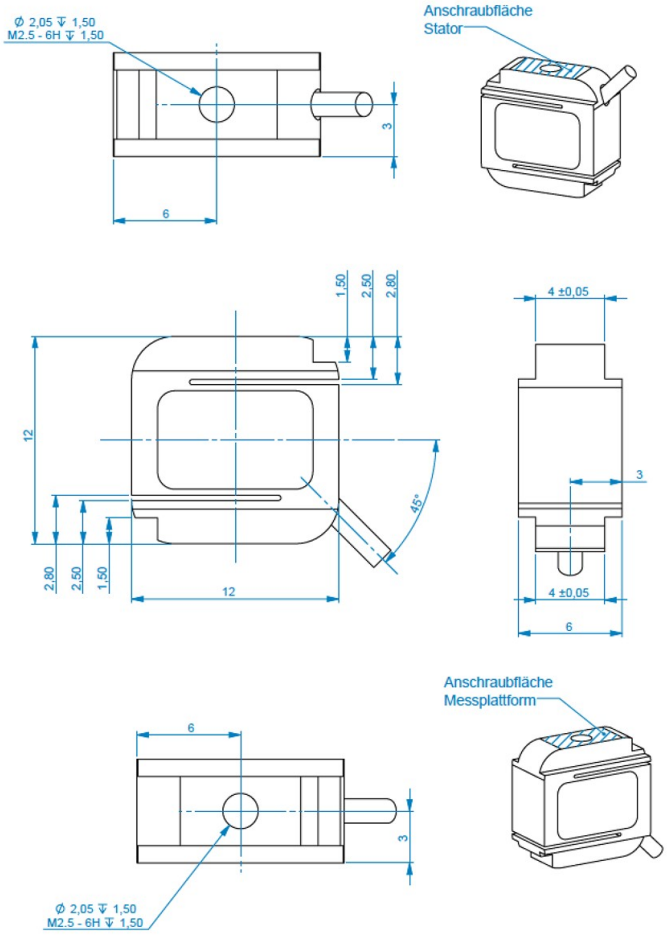

ME-Meßsysteme GmbH
Eduard-Maurer-Str. 9
DE-16761 Hennigsdorf

Tel: +49 (0)3302 8982 4 10
Mail: vertrieb@me-systeme.de
Web: www.me-systeme.de

Stand: 20.03.2026

Technical Data

Basic Data		Unit
Type	Kraftsensor	
Force direction	Tension/Compression	
Rated force Fx	20	N
Force introduction	Internal thread	
Dimension 1	M2,5	
Sensor Fastening	Internal thread	
Dimension 2	M2,5	
Operating force	80	N
Rated displacement	0.05	mm
Lateral force limit	100	%FS
Material	titanium	
Natural frequency fx	5	kHz
Dimensions	12mm x 12mm x 6mm	
Variants	20N	

Electrical Data		Unit
Input resistance	1000	Ohm
Tolerance input resistance	20	Ohm
Output resistance	1000	Ohm
Tolerance output resistance	20	Ohm
Insulation resistance	2	GOhm
Rated range of excitation voltage from	2.5	V
Rated range of excitation voltage to	5	V
Operating range of excitation voltage from	1	V
Operating range of excitation voltage to	10	V
Zero signal tolerance	0.05	mV/V
Characteristic value range from	0.3	mV/V
Characteristic value range to	0.6	mV/V

ME-Meßsysteme GmbH
Eduard-Maurer-Str. 9
DE-16761 Hennigsdorf

Tel: +49 (0)3302 8982 4 10
Mail: vertrieb@me-systeme.de
Web: www.me-systeme.de

Stand: 20.03.2026

Accuracy Data		Unit
Accuracy class	0,1	
Relative linearity error	0.02	%FS
Relative zero signal hysteresis	0.02	%FS
Temperature effect on zero signal	0.02	%FS/K
Temperature effect on characteristic value	0.01	%RD/K
Relative creep	0.05	%FS
Environmental Data		**Unit**
Rated temperature range from	-10	°C
Rated temperature range to	70	°C
Operating temperature range from	-20	°C
Operating temperature range to	85	°C
Storage temperature range from	-10	°C
Storage temperature range to	85	°C
Environmental protection	IP65	

Abbreviation: RD: „Reading“; FS: „Full Scale“;
The exact characteristic value is indicated in the test report;

Pin Assignment

Channel	Symbol	Description	Wire color	PIN
	+Us	positive bridge supply	brown	
	-Us	negative bridge supply	white	
	+Ud	positive bridge output	green	
	-Ud	negative bridge output	yellow	

Screen - transparent. Pressure load : positive output signal

ME-Meßsysteme GmbH
Eduard-Maurer-Str. 9
DE-16761 Hennigsdorf

Tel: +49 (0)3302 8982 4 10
Mail: vertrieb@me-systeme.de
Web: www.me-systeme.de

Stand: 20.03.2026