Force Sensor KD115u 10kN

Item number: 4084

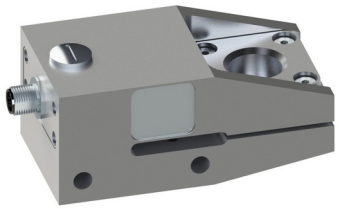

The force sensor KD115u is particularly suitable for measuring the contact force between two electrodes of a spot welder. The distance between the electrodes can be adjusted in a range from 5mm to 20mm. Two Adapters with a circular pressure surface diameter 22mm are included.
The distance between the contact surfaces (electrode distance) is 10mm.

The force insertion can be adapted for measuring radial force of seals or for measuring the cutting force of a tool.

Optional special version

- Protection class IP68: from rated force 200 N
- Pressure range up to 8 bar

ME-Meßsysteme GmbH
Eduard-Maurer-Str. 9
DE-16761 Hennigsdorf

Tel: +49 (0)3302 8982 4 10
Mail: vertrieb@me-systeme.de
Web: www.me-systeme.de

Stand: 20.03.2026

Technical Drawing

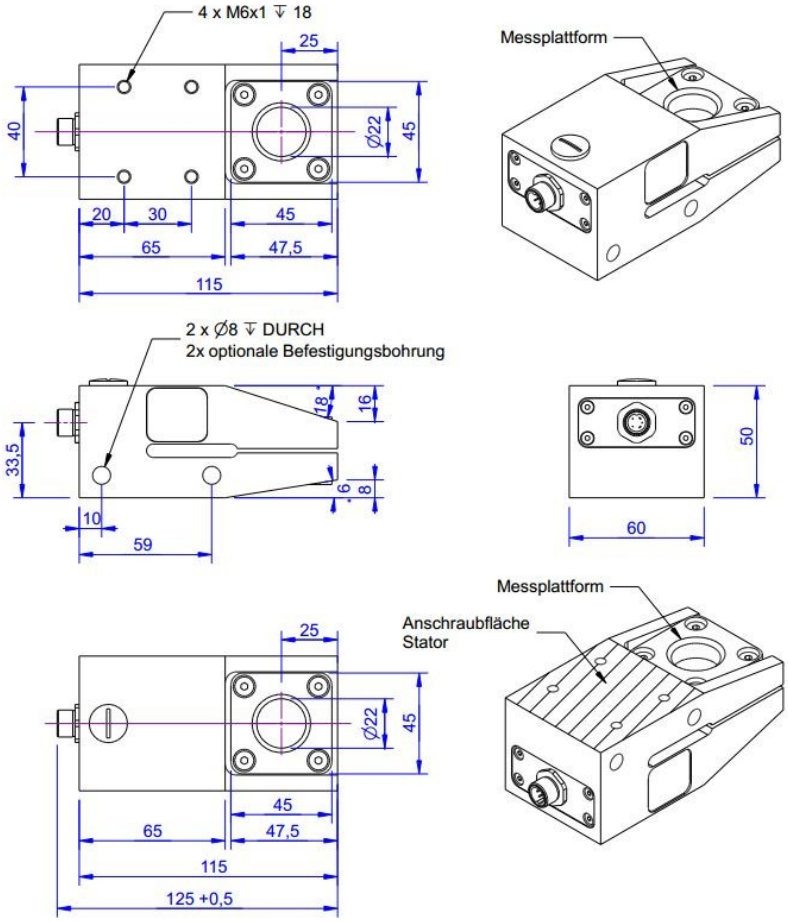

ME-Meßsysteme GmbH
Eduard-Maurer-Str. 9
DE-16761 Hennigsdorf

Tel: +49 (0)3302 8982 4 10
Mail: vertrieb@me-systeme.de
Web: www.me-systeme.de

Stand: 20.03.2026

Technical Data

Basic Data		Unit
Type	Kraftsensor	
Force direction	Compression	
Rated force Fx	10	kN
Force introduction	Fläche	
Dimension 1	22	
Sensor Fastening	Fläche	
Dimension 2	22	
Material	alluminum-alloy	
Surface	Eloxiert	
Dimensions	115 mm x 60 mm x 50 mm	
Height	10	mm
Length or Diameter	22	mm
Variants	1kN... 10kN	

Electrical Data		Unit
Input resistance	390	Ohm
Tolerance input resistance	40	Ohm
Output resistance	350	Ohm
Tolerance output resistance	3	Ohm
Insulation resistance	2x10^9	Ohm
Rated range of excitation voltage from	2.5	V
Rated range of excitation voltage to	5	V
Operating range of excitation voltage from	1	V
Operating range of excitation voltage to	10	V
Zero signal	0.05	mV/V
Rated output	1	mV/V

ME-Meßsysteme GmbH
Eduard-Maurer-Str. 9
DE-16761 Hennigsdorf

Tel: +49 (0)3302 8982 4 10
Mail: vertrieb@me-systeme.de
Web: www.me-systeme.de

Stand: 20.03.2026

Accuracy Data		Unit
Accuracy class	0,1	
Relative linearity error	0.05	%FS
Relative zero signal hysteresis	0.05	%FS
Temperature effect on zero signal	0.01	%FS/K
Temperature effect on characteristic value	0.01	%FS/K
Relative creep	0.05	%FS
Environmental Data		**Unit**

Abbreviation : RD: „Reading“; FS: „Full Scale“;1) The exact nominal sensitivity is indicated in the test report.

Pin Assignment

Channel	Symbol	Description	Wire color	PIN
	+Us	positive bridge supply	brown	1
	-Us	negative bridge supply	white	2
	+Ud	positive bridge output	blue	3
	-Ud	negative bridge output	black	4

Pressure load: positive output signal.Shield- transparent.

ME-Meßsysteme GmbH
Eduard-Maurer-Str. 9
DE-16761 Hennigsdorf

Tel: +49 (0)3302 8982 4 10
Mail: vertrieb@me-systeme.de
Web: www.me-systeme.de

Stand: 20.03.2026