Force Sensor KA224 250kN

Item number: 4307



The KA224 series force sensors are suitable for use in harsh environments. The robust sensor housing can withstand lateral forces up to 100% of the rated force. It has an IP67 protection rating and can operate at temperatures up to 120°C. Two ring nuts can be used for transport. Connection is done via a 6-wire M23 connector.

ME-Meßsysteme GmbH
Eduard-Maurer-Str. 9
DE-16761 Hennigsdorf

Tel: +49 (0)3302 8982 4 10
Mail: vertrieb@me-systeme.de
Web: www.me-systeme.de

Stand: 20.03.2026

Technical Drawing

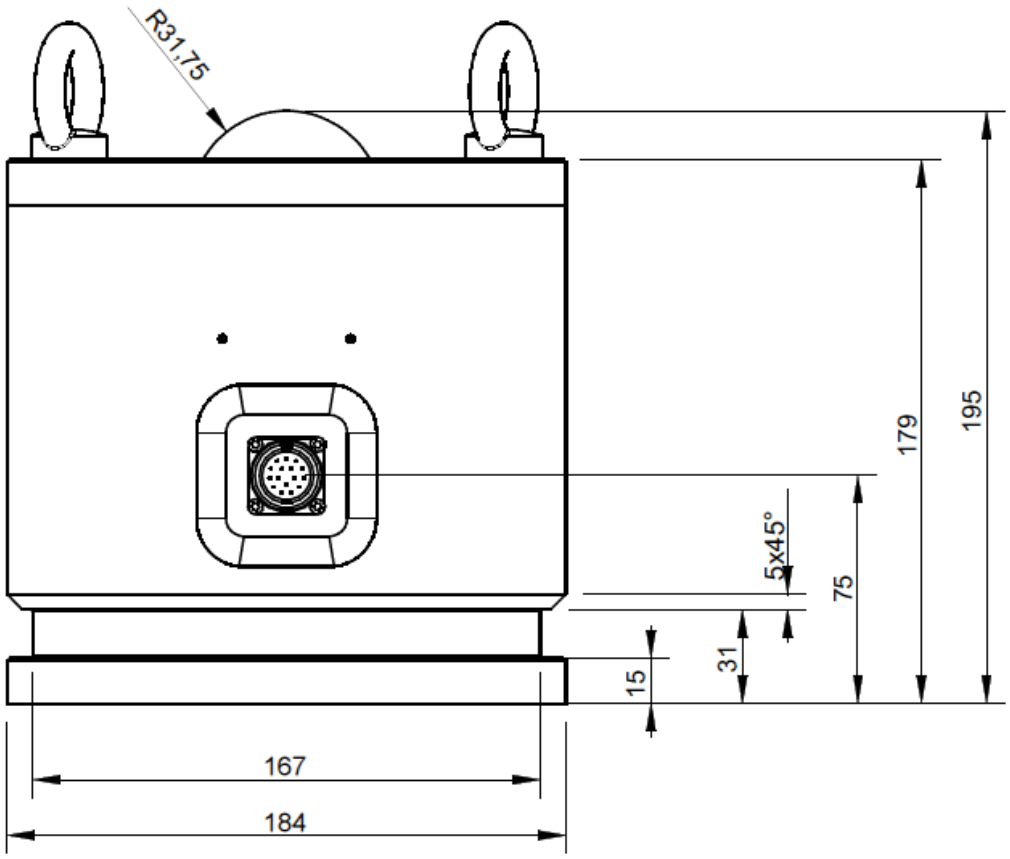

ME-Meßsysteme GmbH
Eduard-Maurer-Str. 9
DE-16761 Hennigsdorf

Tel: +49 (0)3302 8982 4 10
Mail: vertrieb@me-systeme.de
Web: www.me-systeme.de

Stand: 20.03.2026

Technical Data

Basic Data		Unit
Type	Kraftsensor	
Force direction	Compression	
Rated force Fx	250	kN
Force introduction	Load button	
Dimension 1	R31,75	
Sensor Fastening	Fläche	
Dimension 2	Ø143	
Operating force	150	%FS
Lateral force limit	100	%FS
Material	tool steel	
Surface	Galvanisch verzinkt	
Dimensions	Ø 143 mm x 175 mm ... Ø 245 mm x 270 mm	
Height	195	mm
Length or Diameter	184	mm
Variants	100kN... 1MN	

ME-Meßsysteme GmbH
Eduard-Maurer-Str. 9
DE-16761 Hennigsdorf

Tel: +49 (0)3302 8982 4 10
Mail: vertrieb@me-systeme.de
Web: www.me-systeme.de

Stand: 20.03.2026

Electrical Data		Unit
Input resistance	800	Ohm
Tolerance input resistance	100	Ohm
Output resistance	700	Ohm
Tolerance output resistance	10	Ohm
Insulation resistance	5	GOhm
Rated range of excitation voltage from	2.5	V
Rated range of excitation voltage to	5	V
Operating range of excitation voltage from	1	V
Operating range of excitation voltage to	10	V
Zero signal	0.05	mV/V
Rated output	1	mV/V / Fs

Accuracy Data		Unit
Accuracy class	0,1	
Relative linearity error	0.05	%FS
Relative zero signal hysteresis	0.05	%FS
Temperature effect on zero signal	0.01	%FS/K
Temperature effect on characteristic value	0.01	%RD/K
Relative creep	0.05	%FS
Relative repeatability error	0.1	%FS
Environmental Data		**Unit**
Rated temperature range from	-10	°C
Rated temperature range to	85	°C
Operating temperature range from	-20	°C
Operating temperature range to	120	°C
Storage temperature range from	-10	°C
Storage temperature range to	85	°C
Environmental protection	IP67	

Abbreviation : RD: „Reading“; FS: „Full Scale“;1) Value in () from 1000kN

ME-Meßsysteme GmbH
Eduard-Maurer-Str. 9
DE-16761 Hennigsdorf

Tel: +49 (0)3302 8982 4 10
Mail: vertrieb@me-systeme.de
Web: www.me-systeme.de

Stand: 20.03.2026

Pin Assignment

Channel	Symbol	Description	Wire color	PIN
	+Us	positive bridge supply		1
	-Us	negative bridge supply		2
	+Ud	positive bridge output		3
	-Ud	negative bridge output		4
	+Uf	positive sense lead		5
	-Uf	negative sense lead		6

Pressure load: positive output signal.
Shield- transparent.

ME-Meßsysteme GmbH
Eduard-Maurer-Str. 9
DE-16761 Hennigsdorf

Tel: +49 (0)3302 8982 4 10
Mail: vertrieb@me-systeme.de
Web: www.me-systeme.de

Stand: 20.03.2026