Strain gauge K-216.70-2006

Item number: 12026

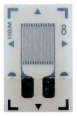

Strain gauges for the construction of sensors. The carrier material of this strain gauge is PEEKF with 20µm thickness. The constantan measuring grid (3 ... 5µm) is covered with PEEKF foil, also with 20µm thickness. Therefore this strain gage is similarly flexible as comparable strain gages made of polyimide foil. In terms of handling, this DMS type is therefore somewhat more robust. Unlike polyimide, PEEKF is not hygroscopic, so that additional sealing of the upper polyimide cover film with epoxy resin is not necessary.

Due to the combination of PEEKF and Konstantan measuring grid, this Strain gauge type is particularly stable in the zero signal and is characterized by very low temperature-induced drift of the zero signal. The temperature-related drift due to expansion of the sensor body is compensated in a wide range from -10 ° C to + 120 ° C for the materials steel (variant 1) and aluminum (variant 3). The permitted operating range is from -40 ° C to + 200 ° C. There are 10^7 load cycles with ± 1000µm/m achieved with a shift of the zero signal less than 300µm/m.

The gage-factor of the Transduce strain gauges is approx. 2 and is not individualized unlike as for stress analysis gages. The tolerance of the gage factor for measuring grids up to 1.5mm grid length is ± 1.5%.

ME-Meßsysteme GmbH
Eduard-Maurer-Str. 9
DE-16761 Hennigsdorf

Tel: +49 (0)3302 8982 4 10
Mail: vertrieb@me-systeme.de
Web: www.me-systeme.de

Stand: 24.04.2026

Technical Drawing

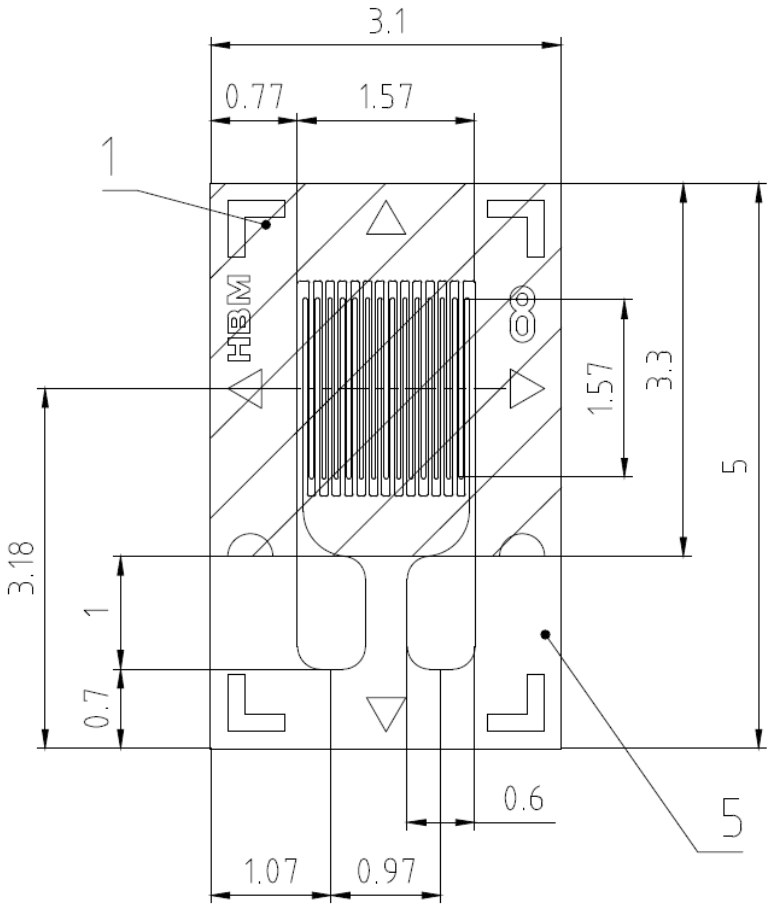

ME-Meßsysteme GmbH
Eduard-Maurer-Str. 9
DE-16761 Hennigsdorf

Tel: +49 (0)3302 8982 4 10
Mail: vertrieb@me-systeme.de
Web: www.me-systeme.de

Stand: 24.04.2026

Technical Data

Strain gauge		Einheit
Type	Metalllfolie	
Number of grids	1	
Grid width	3	mm
maximum width	4.5	mm
Grid length	1.6	mm
maximum length	5.7	mm
Resistance	350	Ohm
Connection	Solder pad	
Substrate	PEEK	

ME-Meßsysteme GmbH
Eduard-Maurer-Str. 9
DE-16761 Hennigsdorf

Tel: +49 (0)3302 8982 4 10
Mail: vertrieb@me-systeme.de
Web: www.me-systeme.de

Stand: 24.04.2026