Measuring amplifier GSV-6A M12

Item number: 11071



Highlights

- robust aluminum housing
- configurable output

The GSV-6A amplifier provides a strain gauge input via a 5-pin M12 socket connector and an analog output via a 8-pin M12 round plug connector.

The GSV-6A is used to convert the bridge signal from force or torque or strain sensors to an analog output signal.

The electronic data sheet of the sensor can be read via a TEDS interface. The amplifier scales the output signal to the final value of the set output signal via the TEDS interface.

The output signal is configurable as a voltage output or as a current output.

The outputs 0...10V, ±10V, 0...5V, ±5V, 4...20mA, 0...20mA can be configured via the control lines "Tara" and "Scale".

An offset or the sampling frequency can also be set.

Thanks to the compact aluminum housing with protection class IP66, mounting at the location of the sensor is possible via the screw connection.

ME-Meßsysteme GmbH
Eduard-Maurer-Str. 9
DE-16761 Hennigsdorf

Tel: +49 (0)3302 8982 4 10
Mail: vertrieb@me-systeme.de
Web: www.me-systeme.de

Stand: 21.03.2026

Technical Drawing

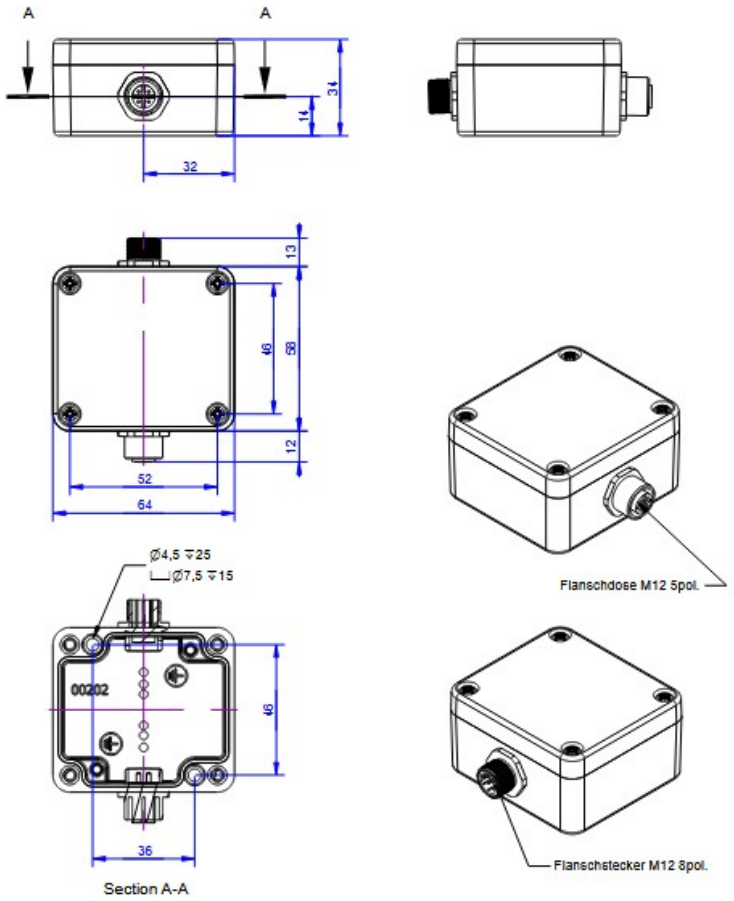

ME-Meßsysteme GmbH
Eduard-Maurer-Str. 9
DE-16761 Hennigsdorf

Tel: +49 (0)3302 8982 4 10
Mail: vertrieb@me-systeme.de
Web: www.me-systeme.de

Stand: 21.03.2026

Technical Data

Basic Data		Unit
Dimensions	58 x 64 x 35	mm³
Housing	Aluminium	
Connection	Plug connector	
Connection type	M12	
Number of channels	1-channel	
Interface	TEDS	
Functions	Tara, Scale, Offset, Frequency, Threshold	

Input analog		Unit
Number of analog inputs	1	
input sensitivity-stepsless from	0.1	mV/V
input sensitivity-stepsless to	8	mV/V
Input voltage from	0	V
Input voltage to	3	V

Output analog		Unit

Accuracy data		Unit
Accuracy class	0,1%	
Temperature effect on the zero point	0.05	%FS/10°C
Temperature effect on the measuring sensitivity	0.01	%RD/10°C
Resolution	16	Bit

ME-Meßsysteme GmbH
Eduard-Maurer-Str. 9
DE-16761 Hennigsdorf

Tel: +49 (0)3302 8982 4 10
Mail: vertrieb@me-systeme.de
Web: www.me-systeme.de

Stand: 21.03.2026

Measuring frequency		Unit
Data frequency from	10	Hz
Data frequency to	25000	Hz
Sampling frequency	50	kHz

Supply		Unit
Supply voltage from	12	V
Supply voltage to	24	V
Current consumption from	22	mA
Strain gauge bridge supply	3	V

Interface		Unit
Type of the interface	Analog	
Quantity of the interface	1	

Zero Adjustment		Unit
Tolerance	0.1	FS
Time period	1	ms
Debouncing time	1	s
Trigger level from	9	V
Trigger level to	28	V
Trigger edge	rising	

ME-Meßsysteme GmbH
Eduard-Maurer-Str. 9
DE-16761 Hennigsdorf

Tel: +49 (0)3302 8982 4 10
Mail: vertrieb@me-systeme.de
Web: www.me-systeme.de

Stand: 21.03.2026

Environmental Data		Unit
Rated temperature range from	-10	°C
Rated temperature range to	65	°C
Operating temperature range from	-40	°C
Operating temperature range to	85	°C
Environmental protection	IP66	
MTTFd	92,7	Jahre
PFHd	1,25 * 10E-6	
PerformanceLevel	C	

Mounting

Functions

The unit is factory-configured to the desired output signal and with the desired functions. The configuration can be modified using the "Tare" and "Scale" control cables.

Terminal assignment

M12 plug connector with A-coding;

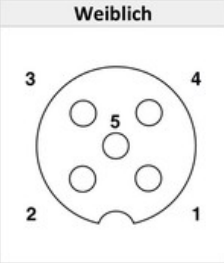

Figure 1: Contact configuration M12 socket

5-pin socket - sensor

Pin No.	Terminal assignment	Phoenix

		SAC-5P
1	+US Positive bridge excitation	brown
2	-US Negative bridge excitation	white
3	+UD Positive bridge signal	blue
4	-UD Negative bridge signal	black
5	TEDS input	grey

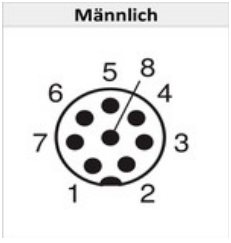

Figure 2: Contact configuration M12 plug

8-pin plug - amplifier

Pin No.	Abbreviation	Terminal assignment	Color code for cable
1	GND	Ground supply voltage	white
2	Ub	Power supply 12V / 24V DC	brown
3	Ua	Analog output 4...20mA / ±10V	green
4	Tara	Control input for zero adjustment	yellow
5	Scale	Amplification Adjustment Control Input (Autoscale)	grey
6	SW	Threshold output	pink
7	GNDA	Ground Signal	blue
8	LED	Status display GSV-6	red

Functions

The functions can be adjusted using the "Tare" and "Scale" control cables.

A simulator to configure the GSV-6 via control cables is also available via

http://www.me-systeme.de/click/click.php

Function	Settings
Analog output "type"	0...10V, ±10V, 0...5V, ±5V, 4...20mA, 0...20mA
Analog output "Offset"	0%, 10%, 12.5%, 20%, 25%, 30%, 37.5%, 40%, 50% Example: an offset of 50% with an analogue output 0...10V shifts the zero point at 0 mV/V to 5V. With an output of 4...20mA, the zero point is shifted to 12mA with an offset of 50%. The input sensitivity is shown at all times on the remaining "End Value - Offset" area.
Data frequency in Hz (Updating of measurement values at the analogue output or interface)	1, 2, 10, 20, 50, 100, 200, 500, 1k, 2k, 5k, 10k, 20k, 25k; The smallest data frequency at the output is 10Hz. At levels below 10Hz, a second-order IIR filter is used.
input sensitivity in mV/V	0.1, 0.2, 0.3. 0.4, 0.5, 1, 2, 3, 4, 5, 8 (standard mode) 0.1, 0.2, 0.3, 0.4, 0.5, 1, 2, 3, 4, 5, 8 (high-res. mode) In high-res. mode the physical measuring range is restricted, which means there is less "reserve" available for a zero adjustment with the Tare function. Available physical measuring ranges: 8

	mV/V, 4 mV/V, 2 mV/V, 1 mV/V The input sensitivity can also be set to 5-digit precision using the Tare and Scale cables in the ClickRClackR menu ("seamless").
Adjust autoscale level	The autoscale level allows the output signal to be defined as a % of the end value, which is shown by implementing "Scale" with the current weight limit. Default setting: 100% (a weight limit of 100% is expected). The autoscale level can be adjusted in stages, from 5% within the range 0 to 100%. When "0%" is set, the autoscale function is deactivated.
Level for threshold value indicator "On"	The switch-on threshold of the threshold value indicator can be adjusted in steps of 5% within the range 0 to 100%. When 0% is set, the threshold value indicator is deactivated.
Level for threshold value indicator "Off"	The switch-off threshold of the threshold value indicator can be adjusted in steps of 5% within the range 3 to 98%. The switch-off threshold should be set lower than the switch-on threshold. If "0%" is set, the switch-off threshold is deactivated.
Operating mode	"Actual value display" (Default), Maximum value display, Inversion of the display, Non-volatile Tare setting (default) or volatile when switched off, "Gradient" setting (special function, not included in

	the standard configuration), TEDS activated (default) / deactivated.
Load pre-setting	Selecting this menu option loads the default settings included on delivery. ±10V, 2 mV/V, 100Hz, Actual value display, TEDS active, Non-inverted display,