Measuring amplifier GSV-5A3 SubD44HD/010/2.5kHz

Item number: 16749



Highlights

- 3-channel strain gauge amplifier
- Analog output ±10 V
- Miniature aluminum housing 124 x 72 x 28 mm³
- Zero setting function (set and reset)
- Self-test function (shunt calibration)

The GSV-5A3 measuring amplifier is an amplifier with three independently configurable channels for strain gauge sensors, such as force sensors, torque sensors, acceleration sensors, or strain transducers.

Sensors are connected via a SubD44HD connector. The measuring amplifier is suitable for connecting 2D or 3D sensors, e.g., 2D or 3D sensors from the K3D, K3A, and KxD series.

The output signals are connected to the SubD15 socket on the rear panel.

The 10 V DC...28 V DC power supply can be connected via the 4-pin M8 connector or the SubD15 socket on the rear panel. There are also two digital inputs with levels of 10...28 V for zeroing all output signals for shunt calibration.

The zeroing status is permanently stored in an EEPROM of the measuring amplifier and is retained even after a power interruption.

This measuring amplifier is suitable for connecting bridge sensors from 120 ohms to 5000 ohms or full-bridge strain gauges. Connection is via 4-wire technology.

The GSV-5A3 measuring amplifier is supplied with an 18 V power supply and cables suitable for the Sub-D sockets.

The GSV-5A3 is operated and configured via a membrane keypad. The measuring range can be set in increments of 4.0, 2.0, 1.0, and 0.5 mV/V using the membrane keypad. Automatic zero signal adjustments can be triggered for the three channels. A self-test (shunt calibration) can be initiated.

The current status of the individual channels is indicated by 14 LEDs. Locking is possible.

ME-Meßsysteme GmbH
Eduard-Maurer-Str. 9
DE-16761 Hennigsdorf

Tel: +49 (0)3302 8982 4 10
Mail: vertrieb@me-systeme.de
Web: www.me-systeme.de

Stand: 21.04.2026

Technical Drawing

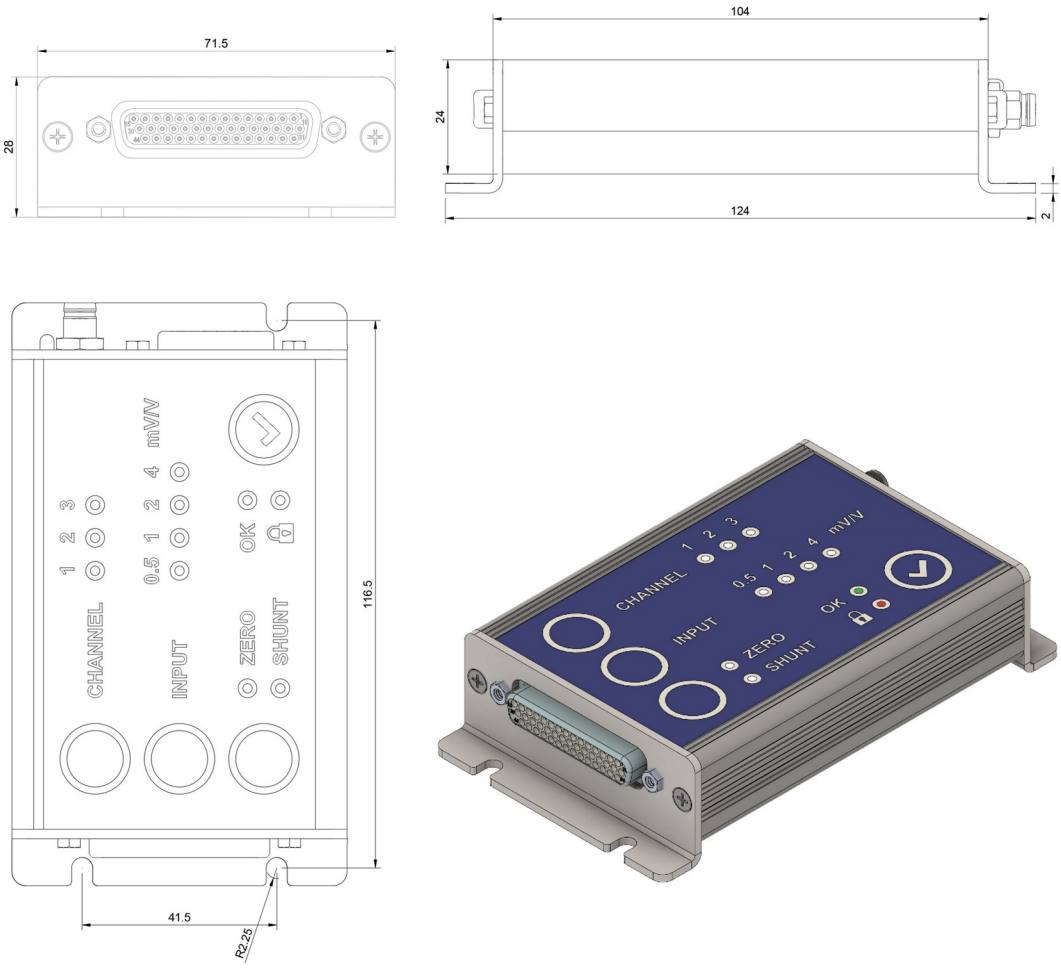

ME-Meßsysteme GmbH
Eduard-Maurer-Str. 9
DE-16761 Hennigsdorf

Tel: +49 (0)3302 8982 4 10
Mail: vertrieb@me-systeme.de
Web: www.me-systeme.de

Stand: 21.04.2026

Technical Data

Basic Data		Unit
Dimensions	124 x 72 x 28	mm
Housing	Aluminium	
Connection	Plug connector	
Connection type	SubD44HD	
Number of channels	3-channel	
Interface	±10V	
Functions	Tara, Shunt, Lock	

Input analog		Unit
Number of analog inputs	3	
Input sensitivity-steps	0.5 | 1.0 | 2.0 | 4.0	mV/V
Strain-gauge-full-bridge resistance from	120	Ohm
Strain-gauge-full-bridge resistance to	5000	Ohm
Input resistance strain-gauge-half- /quarter-bridge	120 | 350 | 1000	Ohm

Output analog		Unit
Number of analog outputs	3	
Voltage output from	-10	V
Voltage output to	10	V
Output resistance - voltage output	47	Ohm
Zero adjustment to	0	V

Accuracy data		Unit
Accuracy class	0,1%	
Relative linearity error	0.02	%FS
Temperature effect on the zero point	0.2	%FS/10K
Temperature effect on the measuring sensitivity	0.1	%RD/10K

ME-Meßsysteme GmbH
Eduard-Maurer-Str. 9
DE-16761 Hennigsdorf

Tel: +49 (0)3302 8982 4 10
Mail: vertrieb@me-systeme.de
Web: www.me-systeme.de

Stand: 21.04.2026

Measuring frequency		Unit
Limit frequency (analog)	2.5	kHz

Supply		Unit
Supply voltage from	10	V
Supply voltage to	28	V
Current consumption from	100	mA
Current consumption to	140	mA
Strain gauge bridge supply	5	V

Interface		Unit

Zero Adjustment		Unit
Type	Button	
Tolerance	1	mV
Time period	160	ms
Debouncing time	2	s
Trigger level from	3	V
Trigger level to	24	V
Trigger edge	falling	

Environmental Data		Unit
Rated temperature range from	-10	°C
Rated temperature range to	65	°C
Operating temperature range from	-40	°C
Operating temperature range to	85	°C
Environmental protection	IP50	

ME-Meßsysteme GmbH
Eduard-Maurer-Str. 9
DE-16761 Hennigsdorf

Tel: +49 (0)3302 8982 4 10
Mail: vertrieb@me-systeme.de
Web: www.me-systeme.de

Stand: 21.04.2026