Measuring amplifier GSV-2LS -5+5/250/2/CANopen

Item number: 3282

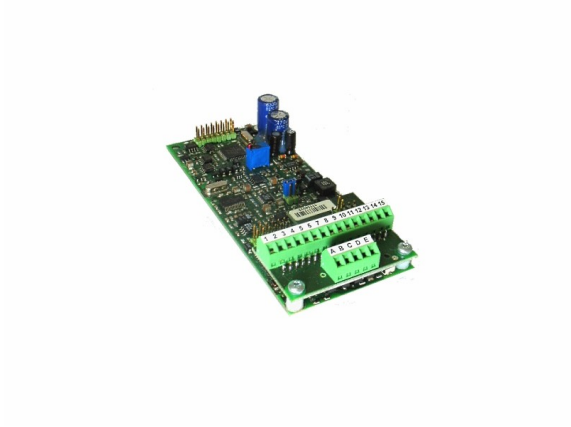

Highlights

- Tare function via control cable
- CAN/CANOpen
- analog output ±5 V
- 24 Bit, to 200.000 Digits display resolution
- extensive software support
- two threshold generators
- trigger input

The GSV-2 is considered the "classic" among industrial amplifiers for sensors with strain gauges. Highest EMC protection according to severity level 4
(EN61000-4-2, 61000-4-4, EN50082-2) and other standards,
IP66 housing and compactness are valued worldwide.
Optionally, there is the GSV with display, connectors or zero reset button and gain switching via relay contacts.

The measuring amplifier GSV-2 is used in process monitoring and weighing technology.Up to 2000 measured values per second can be transmitted via the serial interface RS232. He has excellent digital filters. Filtering or averaging of the transmitted measured values is not necessary.
In addition, an analog output (0 ... 10 V, or ± 5 V or 4 ... 20 mA) is available.
The digital output signal and the analogue output can be set to 0 via a digital control input.
The adjustment range is 200% of the measuring range.

The measuring amplifier GSV-2 shows its advantages especially in connection with RS232, or RS485 or CANbus (CANopen). The analogue output can not be adjusted unlike the digital output. + -100% of the measuring range are mapped to + -5 V.

The measuring range can be set to 3.5 mV / V or 2 mV / V by software, or 1 mV / V by a jumper.

For a low-cost amplifier in 24-bit technology, especially the measuring rate and the excellent software support are remarkable.
The comprehensive software package ME GSV Control is included in delivery.
The setting of the measuring amplifier with regard to measuring rate, switching thresholds or display is done either via control characters or via the software GSVmulti.
For software developers, a Windows DLL is available to integrate the functions.

Various functions, such as an automatic zero point adjustment and noise suppression are available.

ME-Meßsysteme GmbH
Eduard-Maurer-Str. 9
DE-16761 Hennigsdorf

Tel: +49 (0)3302 8982 4 10
Mail: vertrieb@me-systeme.de
Web: www.me-systeme.de

Stand: 21.04.2026

The GSV-2 also has an analogue output. This analog output is characterized by fully analog signal processing. Therefore, the output signal is not scalable depending on the sensor signal. A zero setting function for the analog output is available. Only two variant can be set: 2mV/V at the input corresponds to 5V at the analog output, or 3.5 mV/V at the input corresponds to 5V at the analog output. Alternatively, devices with 10 V analog output are also available (order option). The low-pass filter of the analog output adapts in 3 steps depending on the set data frequency: 2.5 Hz, or 260 Hz, or 1.7 kHz.

ME-Meßsysteme GmbH
Eduard-Maurer-Str. 9
DE-16761 Hennigsdorf

Tel: +49 (0)3302 8982 4 10
Mail: vertrieb@me-systeme.de
Web: www.me-systeme.de

Stand: 21.04.2026

Technical Drawing

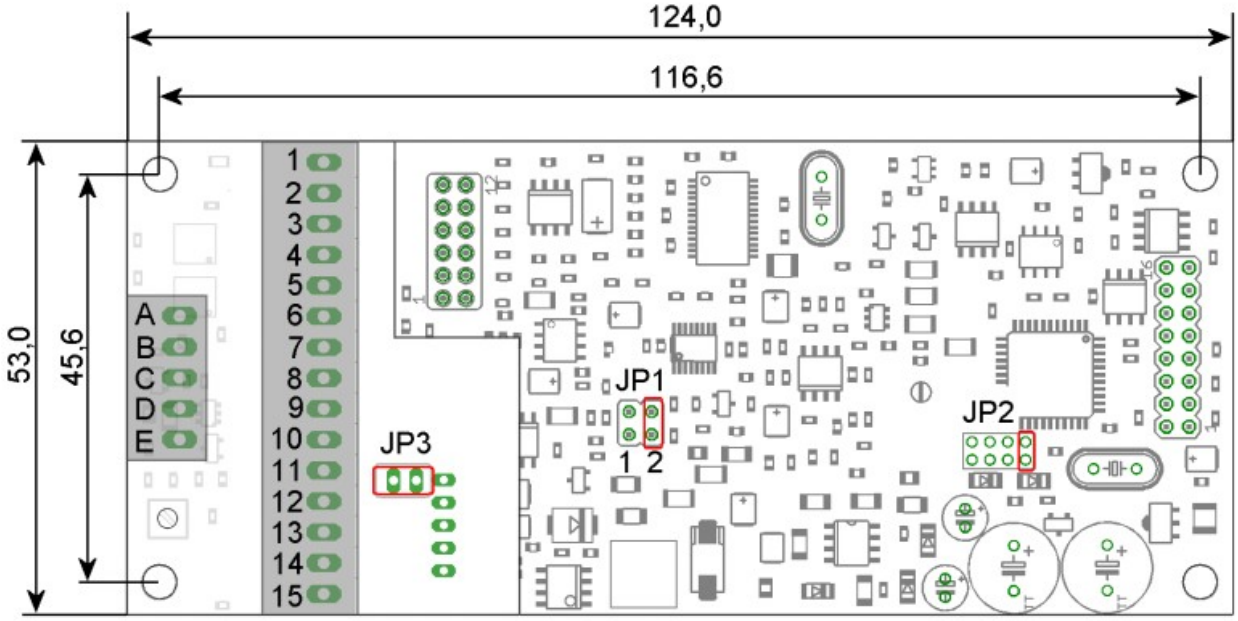

ME-Meßsysteme GmbH
Eduard-Maurer-Str. 9
DE-16761 Hennigsdorf

Tel: +49 (0)3302 8982 4 10
Mail: vertrieb@me-systeme.de
Web: www.me-systeme.de

Stand: 21.04.2026

Technical Data

Basic Data		Unit
Dimensions	125 x 53 x 29	mm³
Housing	Circuit board	
Connection	Screw terminal	
Number of channels	1-channel	
Interface	RS232, CAN/CANopen	

Input analog		Unit
Number of analog inputs	1	
Input sensitivity-steps	2.0 | 3.5	mV/V
Input voltage from	0	V
Input voltage to	10	V
Input resistance-voltage	56	kOhm

Output analog		Unit
Number of analog outputs	1	
Voltage output from	-5	v
Voltage output to	5	V
Output resistance - voltage output	47	Ohm
Current output from	0	

Accuracy data		Unit
Accuracy class	0,1%	
Relative linearity error	0.2	%FS
Temperature effect on the zero point	0.2	%FS/10°C
Temperature effect on the measuring sensitivity	0.1	%RD/10°C
Resolution	24	Bit

ME-Meßsysteme GmbH
Eduard-Maurer-Str. 9
DE-16761 Hennigsdorf

Tel: +49 (0)3302 8982 4 10
Mail: vertrieb@me-systeme.de
Web: www.me-systeme.de

Stand: 21.04.2026

Measuring frequency		Unit
Data frequency from	0	Hz
Data frequency to	1000	Hz
Limit frequency (analog)	1700	Hz

Supply		Unit
Supply voltage from	10	V
Supply voltage to	29	V
Current consumption from	100	mA
Current consumption to	120	mA
Strain gauge bridge supply	2.5 | 5	V

Interface		Unit
Type of the interface	RS232 | RS422	
Quantity of the interface	2	

Zero Adjustment		Unit
Type	Digital	
Tolerance	0.01	%
Debouncing time	4	ms
Trigger level from	3.4	V
Trigger level to	29	V
Trigger edge	Pegel	

ME-Meßsysteme GmbH
Eduard-Maurer-Str. 9
DE-16761 Hennigsdorf

Tel: +49 (0)3302 8982 4 10
Mail: vertrieb@me-systeme.de
Web: www.me-systeme.de

Stand: 21.04.2026

Environmental Data		Unit
Rated temperature range from	-10	°C
Rated temperature range to	65	°C
Operating temperature range from	-40	°C
Operating temperature range to	85	°C
Environmental protection	IP66	

ME-Meßsysteme GmbH
Eduard-Maurer-Str. 9
DE-16761 Hennigsdorf

Tel: +49 (0)3302 8982 4 10
Mail: vertrieb@me-systeme.de
Web: www.me-systeme.de

Stand: 21.04.2026