Measuring amplifier GSV-1A4 M12/2/250

Item number: 3658



Highlights

- Input sensitivity: 2mV/V;
- 4mV/V, 2 mV/V, 1mV/V, 0.5mV/V configurable via jumpers
- Output signals ±10V AND 12mA+-8mA on 15 pin Sub-D
- Integrated half and quarter bridge completion for 350 ohm strain gauge
- Tare function individually via control cables and together via control cables and switches

The measuring amplifier GSV-1A4 is a measuring amplifier with 4 independent channels for sensors with strain gauges such as force sensors, torque sensors, acceleration sensors or extension sensors.

This measuring amplifier is also suitable for connecting strain gauge full and half bridges from 87.5 ohm to 5000 ohm and strain gauge quarter bridges with 350 ohm.

The measuring amplifier GSV-1A4 is supplied with a plug-in 18V power supply and SUB-D mating plugs.

The voltage and current outputs are at the 15-pin Sub-D socket and one ground for each analogue output. Both outputs have been calibrated and can be used at the same time.

The voltage output is ±10V, the current output is 4...20mA with zero adjustment to 12mA (12mA+-8mA).

The sensor inputs, bridge completitions and the inputs for automatic zero adjustment of the individual channels are at the 37-pin Sub-D socket.

The bridge completion resistance with 0.1% tolerance for 350 ohm strain gauge is maintained. The quarter or half bridge mode can be set by the customer at the 37-pin Sub-D socket (see wiring diagram for 37-pin Sub-D socket).

As an option, it is possible to use the 6-wire technology of GSV-1L. The use of 6-wire technology must be configured to the circuit board.

GSV-1A4 M12 socket variant

The GSV-1A4 is optionally equipped with round connectors for the sensor connection.

The mating plugs must be ordered separately or are a component of the sensor.

ME-Meßsysteme GmbH
Eduard-Maurer-Str. 9
DE-16761 Hennigsdorf

Tel: +49 (0)3302 8982 4 10
Mail: vertrieb@me-systeme.de
Web: www.me-systeme.de

Stand: 21.03.2026

ME-Meßsysteme GmbH
Eduard-Maurer-Str. 9
DE-16761 Hennigsdorf

Tel: +49 (0)3302 8982 4 10
Mail: vertrieb@me-systeme.de
Web: www.me-systeme.de

Stand: 21.03.2026

Technical Drawing

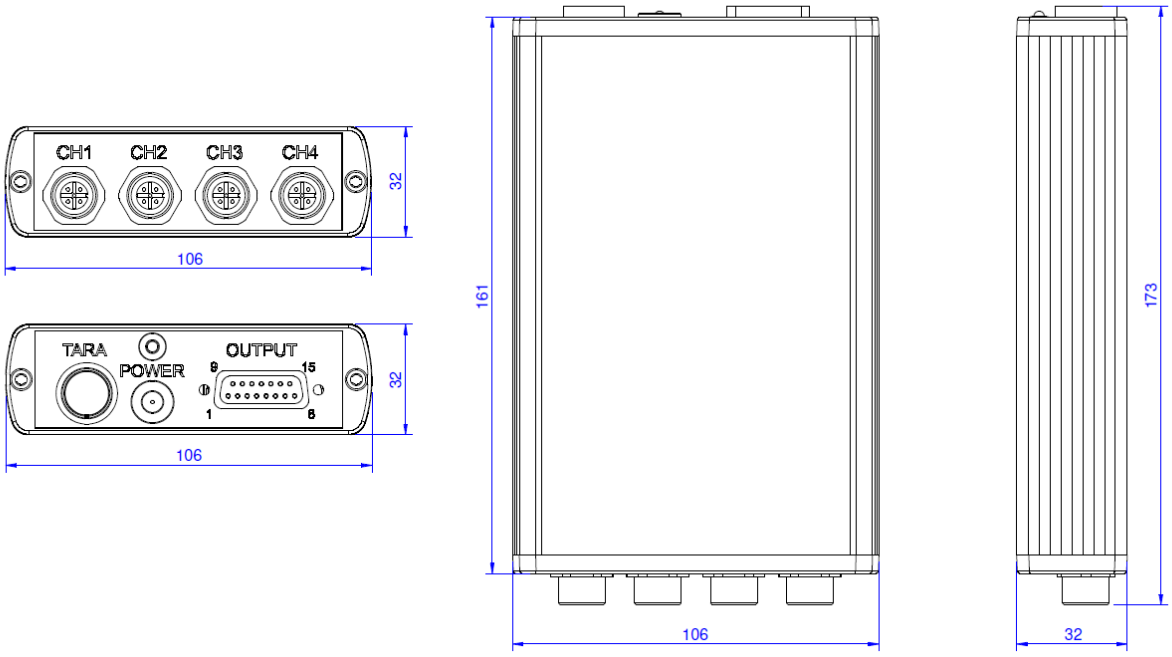

ME-Meßsysteme GmbH
Eduard-Maurer-Str. 9
DE-16761 Hennigsdorf

Tel: +49 (0)3302 8982 4 10
Mail: vertrieb@me-systeme.de
Web: www.me-systeme.de

Stand: 21.03.2026

Technical Data

Basic Data		Unit
Dimensions	106 x 173 x 32	mm³
Housing	Aluminium	
Connection	Plug connector	
Connection type	M12	
Number of channels	4-channel	
Interface	±10V, 4...20mA	

Input analog		Unit
Input sensitivity-steps	2.0 | 1.0 | 0.5	mV/V
Strain-gauge-full-bridge resistance from	87	Ohm
Strain-gauge-full-bridge resistance to	5000	Ohm

Output analog		Unit
Voltage output from	-10	V
Voltage output to	10	V
Output resistance - voltage output	35	Ohm
Current output from	4	mA
Current output to	20	mA
Maximum load resistance - current output	35	Ohm

Accuracy data		Unit
Accuracy class	0,1%	
Relative linearity error	0.02	%FS
Temperature effect on the zero point	0.2	%FS/10°C
Temperature effect on the measuring sensitivity	0.1	%RD/10°C

ME-Meßsysteme GmbH
Eduard-Maurer-Str. 9
DE-16761 Hennigsdorf

Tel: +49 (0)3302 8982 4 10
Mail: vertrieb@me-systeme.de
Web: www.me-systeme.de

Stand: 21.03.2026

Measuring frequency		Unit
Limit frequency (analog)	250	Hz

Supply		Unit
Supply voltage from	11	V
Supply voltage to	30	V
Strain gauge bridge supply	5	V

Interface		Unit
Type of the interface	Analog	

Zero Adjustment		Unit
Type	Button	
Tolerance	5	mV
Time period	90	ms
Debouncing time	4	ms
Trigger level from	3.5	V
Trigger level to	30	V
Trigger edge	falling	

Environmental Data		Unit
Rated temperature range from	-10	°C
Rated temperature range to	65	°C
Operating temperature range from	-40	°C
Operating temperature range to	85	°C
Environmental protection	IP40	

Mounting

Symbol	Description	Color	Color	PIN

-U_S	negative bridge power supply	white	white	2
+U_S	positive bridge power supply	brown	brown	1
+U_D	positive differential input	green	blue	3
-U_D	negative differential input	yellow	black	4
QB	AUX connected to quarter bridge 350 ohm	grey	grey	5

Six-wire technology is not possible for M12 socket variant.

In quarter bridge and half bridge mode, the internal half bridge completion must be activated via the solder bridge on the circuit board (also possible in the factory as a free order option).

Description	Channel 1 Color/PIN	Channel 2 Color/PIN	Channel 3 Color/PIN	Channel 4 Color/PIN

Output voltage	brown, 2	yellow, 5	red-white, 15	light green, 12
Output current	red, 3	dark green, 6	brown-white, 14	pink, 11
Ground	orange, 4	blue, 7	black-white, 13	white, 10

Automatic Zero Adjustment

Automatic Zero-adjustment is operated via push button or via digital input. Advice: the GNDio PIN 1 for digital input with PIN 8 is isolated from analog Ground PIN4.
Analog grounds PIN4, PIN7, PIN13, PIN10 are connected.
Connect GNDio (PIN1) permanently with Ground (PIN4) and connect Supply Voltage (PIN9) via Relais or button with PIN8 for remote-controlled zero adjustment.

GNDio for digital input	black, 1
Zero-adjustment input	purple, 8
Supply Voltage output	grey, 9

The colors correspond to the core colors of the supplied 3 m cable with 15-pin connector SubD15.

Wiring diagram for a full bridge M12 variant

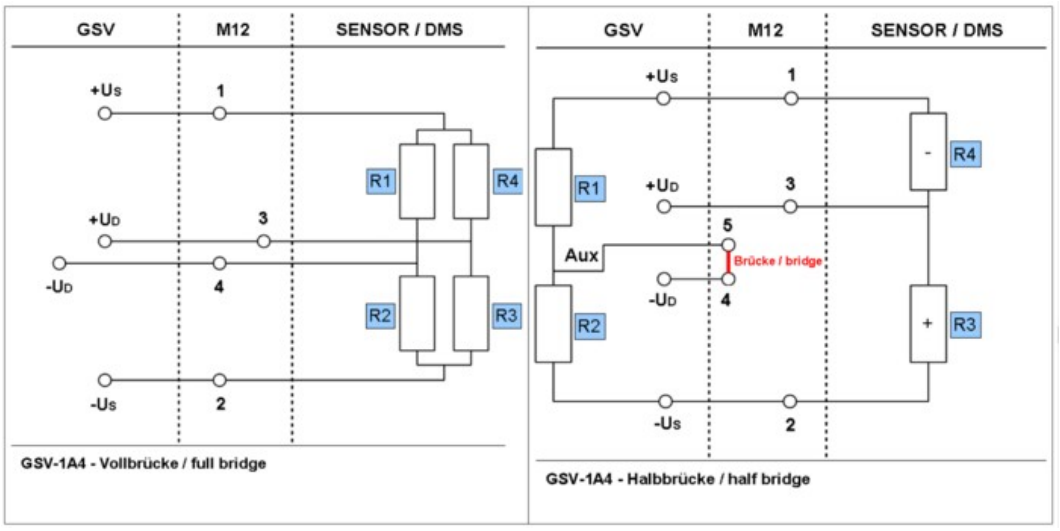

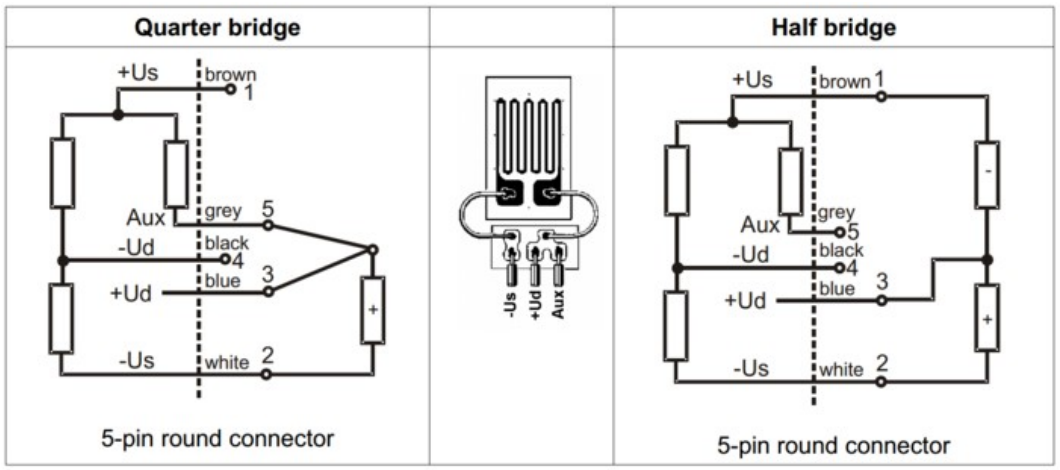

Note: Max. 2 channels can be operated with minimum sensor load of 87 ohm. The other 2 channels can be loaded with minimum 350 ohm. If the current outputs cannot be used, all channels with a minimum sensor load of 120 ohm can be operated. This limit is necessary for reasons of thermal stability.

Adjusting the sensitivity

The sensitivity of channels 1 to 4 can be adjusted. On the circuit board of the GSV-1A4, each channel has a jumper post field with 4 plug options in total.

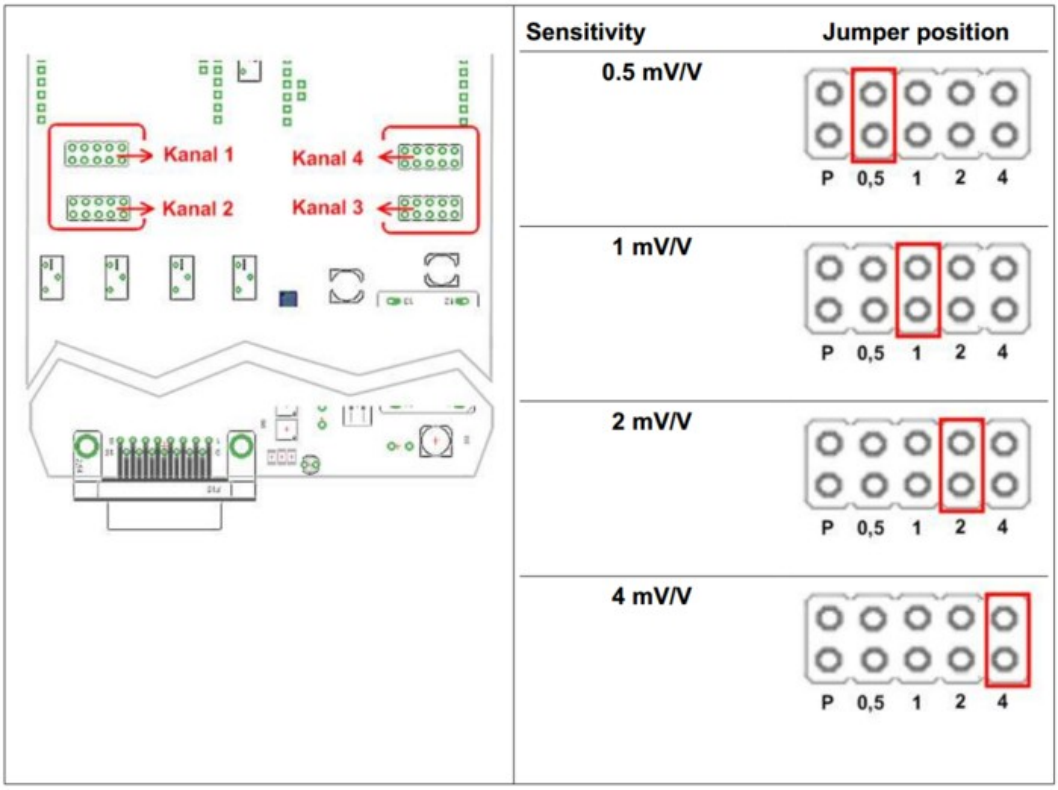

Opening the device

1.

All 4 screw covers and the fastening screws on each end cover should be removed.

2.

The circuit board is unplugged from the side of the 15-pin Sub-D socket.

3.

In the M12 socket version, the cover is pushed through the housing slightly slanted.